Honeywell

RA890F Flame Safeguard Primary Control

The RA890F Protectorelay™ Primary Control is a nonprogramming, amplifying relay that provides solid state electronic flame safeguard protection for industrial and commercial gas, oil, or combination gas-oil burners.

- Employs rectification principle of electronic flame detection using a flame rod, rectifying photocell, or C7012A,C Ultraviolet Flame Detector.
- Clipping pilot link jumper wire permits use with standing pilots.
- Can directly replace RA890E and mount on same Q270A Subbase.
- Solid state circuitry eliminates vacuum tube replacement and increases resistance to vibration. Power application not required during Off cycle; no tube to warm up before starting.
- Push-to-reset safety switch in dust-resistant enclosure.
- Built-in protection against ignition crossover in flame rod systems.
- Does not start if flame-simulating failure occurs in flame detector circuit.
- Automatic safety shutdown if flame fails on start, or if flame not re-established after flame failure.
- Flame signal current is directly measurable at test jack.
- Line or 24 volt, automatic or manual controller can be used. (Manual controller must open circuit on either power or flame failure.)
- Captive mounting screws allow easy mounting and removal. Thermoplastic mounting base.
- Optional alarm circuit indicates safety shutdown.

CONTENTS

Specifications *2*
Ordering Information *2*
Installation *4*
Operation *7*
Checkout *8*
Service *10*
Troubleshooting and Maintenance *10*

S.Y. • Rev. 11-94 • *©Honeywell Inc. 1994*

60-2034-7

Specifications

TRADELINE® MODELS

TRADELINE® models of this device are available. They are selected and packaged to provide ease of stocking, ease of handling, and maximum replacement value. TRADELINE® model specifications are the same as those of the standard model except as noted below.

TRADELINE® MODELS AVAILABLE:
RA890F for 120V, 50/60 Hz power supply.
RA890F for 240V, 50/60 Hz power supply.
ADDITIONAL FEATURES: TRADELINE® packed with cross reference label and special cross reference listing.

STANDARD MODELS

MODEL: RA890F Protectorelay™ Primary Control.
ELECTRICAL RATINGS:
Voltage and Frequency: 100V, 120V, 208V, 220V, or 240V, 50/60 Hz. As ordered.
Power Consumption:
60 Hz: 7.0W maximum, 1.7W standby.
50 Hz: 8.5W maximum, 3.0W standby.
VA Ratings:
60 Hz: 13.0 VA maximum, 8.3 VA standby.
50 Hz: 17.0 VA maximum, 13.6 VA standby.

Terminal Ratings:

Terminal	Electrical Load		120 Vac	240 Vac
3	Burner Motor	Full Load	5.2A	2.6A
		Locked Rotor (inrush)	31.2A	15.6A
	Ignition[a,b]		3.0A	1.5A
	Pilot Fuel Valve		25 VA	25 VA
4	Ignition[a]		3.0A	1.5A
5	Gas Valve[b]		125 VA	125 VA

[a] If ignition and motor are connected to terminal 3, terminal 4 cannot be used. This is to prevent overloading relay 1K.
[b] Alternate Rating: 25 VA pilot duty plus one or more motorized valves with total rating 400 VA opening, 200 VA holding.

Alarm Contacts: 3.0A at 24 Vac or 1.0A at 120 Vac in suitable wiring enclosure.
Low Voltage Control Circuit (T-T): 0.3A.

Ordering Information

When purchasing replacement and modernization products from your TRADELINE® wholesaler or your distributor, refer to the TRADELINE® catalog or price sheets for complete ordering number, or specify:

1. Order number (standard or TRADELINE®).
2. Voltage and frequency.
3. Flame response time.
4. Safety switch timing.
5. Alarm contacts, if desired.
6. Fast thermistor timing if desired.
7. Accessories, if desired.

If you have additional questions, need further information, or would like to comment on our products or services, please write or phone:

1. Your local Honeywell Home and Building Control sales office (check white pages of phone directory).
2. Home and Building Control Customer Logistics
   Honeywell Inc., 1985 Douglas Drive North
   Minneapolis, Minnesota 55422-4386 (612) 951-1000

In Canada—Honeywell Limited/Honeywell Limitée, 740 Ellesmere Road, Scarborough, Ontario M1P 2V9. International sales and service offices in all principal cities of the world. Manufacturing in Australia, Canada, Finland, France, Germany, Japan, Mexico, Netherlands, Spain, Taiwan, United Kingdom, U.S.A.

NOTE: Allowable inrush can be up to ten times the pilot duty rating.

EXAMPLE: Pilot duty rating = 25 VA.
At 120V, running current is 25 = 0.21A.
Maximum allowable inrush is 10 times 0.21 = 2.1A.

Maximum Power Interruption: 12 milliseconds; longer interruption causes 1K to drop out; burner shuts down. After a short delay for component check, burner should restart and operate normally.

FLAME FAILURE RESPONSE TIME: 0.8 seconds or 3 seconds nominal, as ordered. Three second response is recommended for nonrecycling ignition cutoff service to prevent nuisance shutdowns.

FLAME DETECTORS: Flame rod, rectifying photocell, or C7012A,C Ultraviolet Flame Detector.

AMBIENT TEMPERATURE RATINGS:

Minimum:

Model	**°F**	**°C**
15 sec safety switch	-20	-29
30 sec safety switch	+10	-12

Maximum:

	50 Hz		**60 Hz**	
Model	**°F**	**°C**	**°F**	**°C**
Without alarm contacts	115	46	125	52
With alarm contacts	105	41	115	46

Models with 30 second safety switch operate safely at temperatures to -30°F (-34°C) but may encounter difficulty when resetting a tripped safety switch below the rated temperature.

SAFETY SWITCH TIMING (LOCKOUT TIME): 15 or 30 seconds as ordered. Timings are proportional with input voltages and temperatures. For RA890s that are classified in Underwriters Laboratories Inc gas groups 6 and 6A and oil group 8, the maximum safety switch timing with voltages ranging from 70 to 110 percent of rated voltage and with ambients ranging from 32°F (0°C) to 115°F (66°C) is allowed to be as high as 50 seconds.

FLAME ESTABLISHING PERIOD:
Models with 15 sec Safety Switch: Up to 15 sec.
Models with 30 sec Safety Switch: Up to 30 sec.

RECYCLE TIME: Occurs immediately when flame loss recognized. See Flame Failure Response Time.

THERMISTOR DELAY OF LOAD RELAY PULL-IN: 4 seconds nominal. Voltage level and ambient temperature affects delay time. Actual delay may be 2 to 30 seconds under ambient temperature extremes. Fast thermistor model with 1 sec nominal delay time is available when long delay is a problem. Fast delay model is available only with the following specifications: 120V, 50/60 Hz, 15 sec safety switch, 0.8 flame response timing, for use with flame rod detector only.

ALARM CONTACTS (Optional): Isolated spdt contacts. Male quick-connect terminals (female quick-connects included). See rating above.

DIMENSIONS: Approximately 5 x 5 x 5 in. (127 x 127 x 127 mm) including subbase.

MOUNTING: On Q270A Universal Mounting Base ordered separately.

APPROVALS: Underwriters Laboratories Inc Listed: 120V, models only; File No. MP268, Guide No. MCCZ.

NOTE: All devices meeting UL components recognition have the following symbol:

Replacement exchange controls that meet current UL requirements are identified with the term REMFR'D following the listing or component recognition mark.

Canadian Standards Association Certified: 120V models only; File No. LR1620.

Factory Mutual Approved: Report No. 17678, 19417, and 19784.

American Gas Association Design Certified for -20°F (-29°C): Certificate No. 20-AL.

ACCESSORIES:
W136A Microammeter (includes 196146 Plug).
121708 Flame Simulator.
196146 Meter Connector Plug.
FSP1535 Tester for operational check of all RA890s.
Q270A1024 Mounting Subbase serves as junction box to connect to external circuits. Q270A contains terminal blocks with coded terminals and screws.
R482F Relay to provide safe-start checks when RA890F is used in special standing pilot applications.
13891L Cover Assembly with reset button. 120 Vac model.
118702E Remote Reset Cover.

Installation

WHEN INSTALLING THIS PRODUCT…

1. Read these instructions carefully. Failure to follow them could damage the product or cause a hazardous condition.
2. Check the ratings given in the instructions and on the product to make sure the product is suitable for your application.
3. Installer must be a trained, experienced, flame safeguard control technician.
4. After installation is complete, check out product operation as provided in these instructions.

! CAUTION

1. Disconnect power supply before beginning installation to prevent electrical shock and equipment damage.
2. All external timers must be Listed or Component Recognized by authorities that have jurisdiction for the specific purpose for which they are used.

Refer to Fig. 3 and 4 for typical field wiring connections. See Fig. 5 for schematic diagram. Follow the burner manufacturer's instructions if supplied. Otherwise proceed as follows.

LOCATION

Temperature

Install the RA890F where the surrounding temperatures remain within the Ambient Operating Temperature Ratings listed in the SPECIFICATIONS section.

Humidity

Install the RA890F where the relative humidity never reaches the saturation point. Condensation of moisture on the RA890F may cause enough leakage to short the flame signal to ground and prevent the burner from starting.

Vibration

Do not install the RA890F where it could be subject to excessive vibration. Vibration shortens the life of the electronic and mechanical components.

Weather

The RA890F is not designed to be weathertight. If it is installed outdoors, use a suitable weathertight enclosure.

Mount Subbase

Locate the subbase where ambient temperature is within the specified rating.

Mount the subbase so the top and bottom are horizontal and the back is vertical. The subbase can lean backward as much as 45 degrees when necessary. See Fig. 1.

Fig. 1—Mounting subbase in in. (mm).

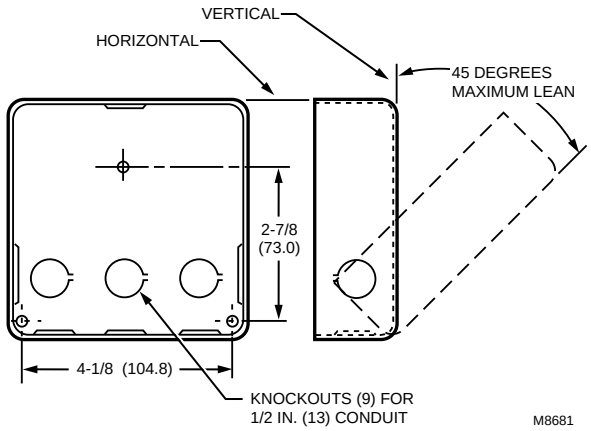

WIRE SUBBASE

1. Disconnect power supply (see Fig. 2) before making wiring connections to avoid electrical shock and equipment damage. Assure all wiring complies with applicable electrical codes, ordinances, and regulations. Use NEC Class 1 (line voltage) wiring.

When wiring the Q270A Universal Mounting Base for use with the RA890F, use the terminal designations 6, T and T (printed in white).

2A. *For normal installations*, use moisture-resistant No. 14 wire suitable for at least 167°F (75°C). *For high temperature installations*, use moisture-resistant No. 14 wire selected for a temperature rating above the maximum operating temperature for all but the ignition and flame detector F leadwires.

a. *For the ignition*, use Honeywell Specification no. R1061012 Ignition Cable or equivalent. (This wire is rated at 350°F (175°C) for continuous duty, and up to 500°F (260°C) for intermittent use. It was tested to 25,000V.)

b. *For the flame detector F leadwire*, use Honeywell Specification no. R1298020 or equivalent. (This wire is rated up to 400°F (205°C) for continuous duty. It was tested for operation up to 600V and breakdown up to 7500V.)

2B. *For ignition installations in a contaminating environment*, use Honeywell Specification no. R1239001 High Tension Ignition Cable or equivalent. This wire is very resistant to severe conditions of oil, heat, and corona, and is tested to withstand high voltages up to 25,000V rms in a salt bath for one minute without breakdown. It is rated at 200°F (93°C) for continuous duty, and up to 350°F (175°C) for intermittent use.

IMPORTANT: *Do not run high voltage ignition transformer wires in the same conduit with the flame detector wiring.*

IMPORTANT: *When connecting wire to screw terminal of terminal strip, wrap wire at least 3/4 of distance around screw without overlapping. With appropriately sized screwdriver, tighten screw until wire is snugly in contact with underside of screw and contact plate. Tighten screw additional one-half turn. Do not use a push-type ratchet screwdriver.*

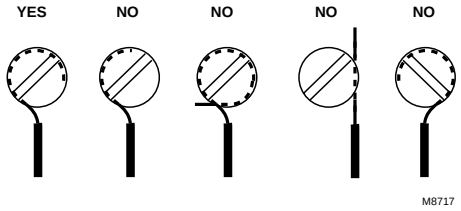

HOOKUP

RA890E Replacement

When replacing an RA890E with an RA890F, no changes are required in the wiring to the subbase. Leave the hot line connected to terminal 1 even though it is not required to operate the control.

Fig. 2—Flame detector wiring.

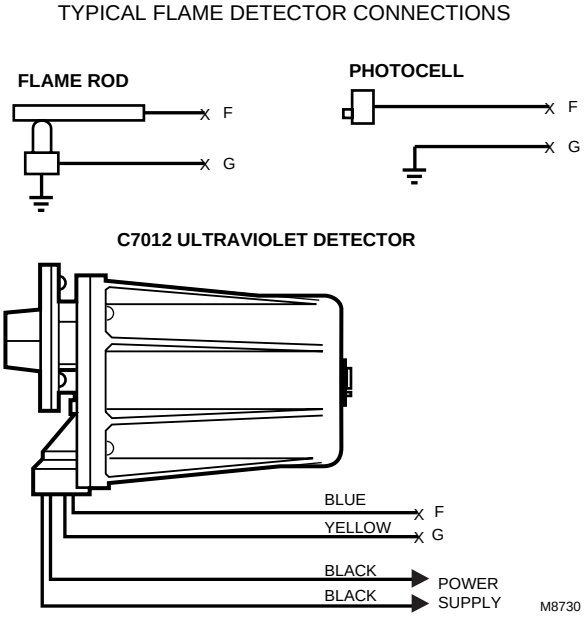

Fig. 3—Gas system with interrupted ignition.

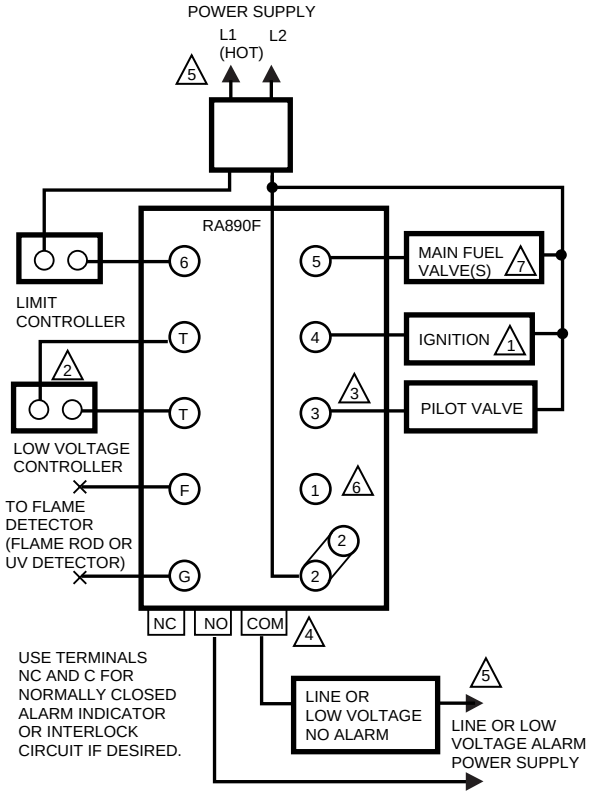

1. FOR INTERMITTENT IGNITION, CONNECT TO TERMINAL 3.
2. IF LINE VOLTAGE CONTROLLER IS USED, CONNECT IT BETWEEN THE LIMIT CONTROLLER AND TERMINAL 6. JUMPER T-T.
3. HOOKUP FOR CONTINUOUS (STANDING) PILOT IS THE SAME AS FOR INTERRUPTED IGNITION EXCEPT IGNITION AND PILOT VALVE CONNECTIONS ARE NOT MADE.
4. SPDT ALARM TERMINALS OPTIONAL. IF LINE VOLTAGE IS USED, RA890F MUST BE MOUNTED IN SUITABLE ENCLOSURE. ALARM TERMINALS ARE ENERGIZED THROUGH RA890 SAFETY SWITCH. ALARM WILL NOT SOUND UNTIL SAFETY SWITCH TRIPS OUT.
5. POWER SUPPLY. PROVIDE DISCONNECT MEANS AND OVERLOAD PROTECTION AS REQUIRED.
6. FOR RA890E REPLACEMENT, LEAVE POWER CONNECTED TO TERMINAL 1. SUBBASE WIRING CHANGES ARE NOT REQUIRED.
7. SOME AUTHORITIES HAVING JURISDICTION PROHIBIT THE WIRING OF ANY LIMIT OR OPERATING CONTACTS IN SERIES WITH THE MAIN FUEL VALVES (S).

M8752

Fig. 4—Oil system with interrupted ignition.

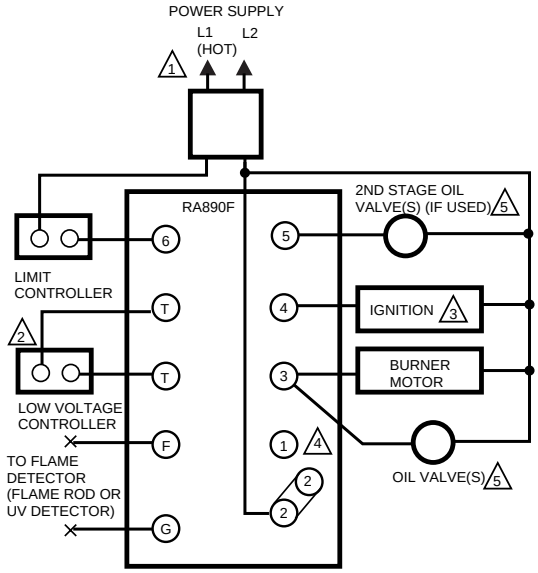

1. POWER SUPPLY. PROVIDE DISCONNECT MEANS AND OVERLOAD PROTECTION AS REQUIRED.
2. IF LINE VOLTAGE CONTROLLER IS USED, CONNECT IT BETWEEN THE LIMIT CONTROLLER AND TERMINAL 6. JUMPER T-T.
3. FOR INTERMITTENT IGNITION, CONNECT TO TERMINAL 3.
4. FOR RA890E REPLACEMENT, LEAVE POWER CONNECTED TO TERMINAL 1. SUBBASE WIRING CHANGES ARE NOT REQUIRED.
5. SOME AUTHORITIES HAVING JURISDICTION PROHIBIT THE WIRING OF ANY LIMIT OR OPERATING CONTACTS IN SERIES WITH THE MAIN FUEL VALVES (S).

M8753

Fig. 5—Schematic of the RA890F.

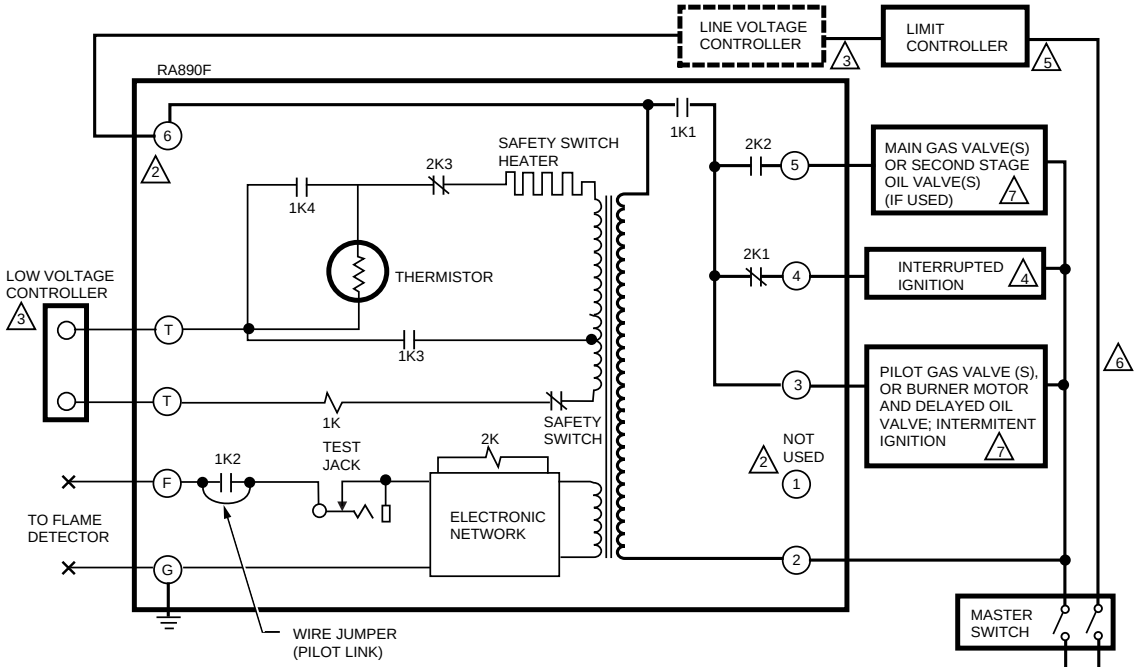

1. PROVIDE DISCONNECT MEANS AND OVERLOAD PROTECTION AS REQUIRED.
2. RA890F IS POWERED AT TERMINAL 6 ONLY. WHEN REPLACING ANOTHER MODEL, LEAVE HOT LINE (L1) CONNECTED TO TERMINAL 1, EVEN THROUGH IT IS NOT NECESSARY FOR OPERATION.
3. MAY USE LINE OR LOW VOLTAGE CONTROLLER. IF LINE VOLTAGE CONTROLLER IS USED, CONNECT IT BETWEEN THE LIMIT CONTROLLER AND TERMINAL 6. JUMPER T-T.
4. FOR INTERMITTENT IGNITION, CONNECT TO TERMINAL 3.
5. OPENING OF A LIMIT CONTROL OR LINE VOLTAGE CONTROLLER INTERRUPTS ALL POWER TO THE CONTROL, INCLUDING THE ELECTRONIC NETWORK.
6. ALL WIRING MUST BE NEC CLASS 1.
7. SOME AUTHORITIES HAVING JURISDICTION PROHIBIT THE WIRING OF ANY LIMIT OR OPERATING CONTACTS IN SERIES WITH THE MAIN FUEL VALVES (S).

M8754

MOUNT RA890F

Disconnect power supply.

Remove relay cover (see Fig. 6) and position the RA890F over the Q270A Subbase. Start all ten mounting screws and tighten uniformly. These screws complete electrical circuits (terminal 1 excepted) and hold the RA890F to the subbase.

As shipped from the factory, the RA890F is suitable for use with interrupted or intermittent systems.

Fig. 6—RA890F and Q270A Subbase.

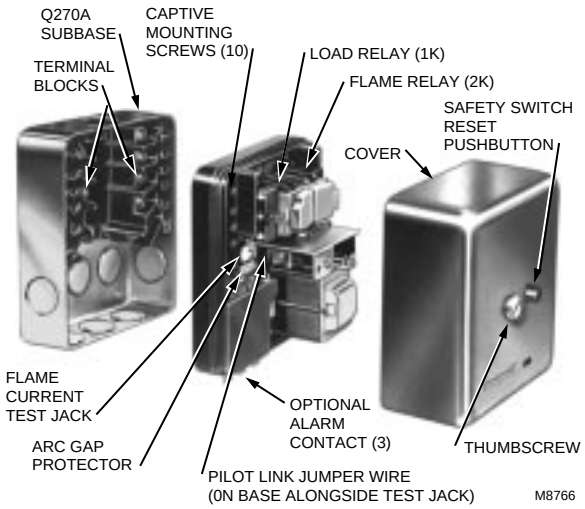

FOR STANDING PILOT SYSTEMS ONLY

For use with standing pilot systems. Clip the pilot link (wire loop in Fig. 7) as follows:

1. Turn off power.
2. Clip pilot link with side cutters. *Do not twist off because damage to circuit board can result*. Remove any pieces of the wire.
3. Be sure there is electrical clearance between the two ends of the link, and from link ends to the test jack or relay frame. Then restore power.

Fig. 7—Location of arc gap protector on RA890F.

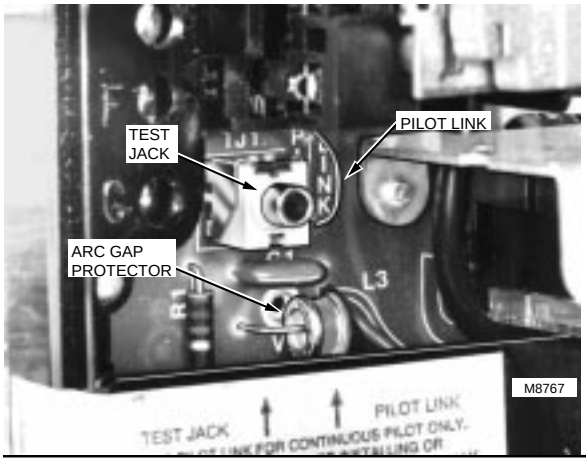

Operation

NORMAL OPERATION SUMMARY

Normal control operation is summarized below. Refer to Fig. 5 for the internal schematic of the control.

1. *Call for heat*—Load relay pulls in after a slight delay (flame relay must be out), ignition starts, pilot valve or burner motor is powered. Safety switch heats.
2. *Flame proved*—Flame relay pulls in, safety switch heater is de-energized, main valve is powered, ignition is cut off (when used for interrupted ignition).
3. *Call for heat satisfied*—Load relay drops out, fuel valves close, burner motor stops, and flame relay drops out.

NOTE: The pull-in of the load relay is delayed by a thermistor with a nominal delay time of 3 to 5 seconds. The thermistor is affected by ambient temperature, and the delay time may be as short as 2 seconds when the temperature is high and as long as 30 seconds when the temperature is low. As the thermistor warms up, the 1K relay might hum slightly before it pulls in. This is normal.

Checkout

CAUTION

Use extreme care while testing the RA890F; line voltage can be present on most terminals when power is on.

PRELIMINARY CHECKS

Before placing the system in operation, complete the following preliminary checks:

1. Check through wiring. Use a meter to check the continuity of all circuits. See Fig. 8.
2. Check flame detector installation.
3. Check burner adjustments.
4. Thoroughly purge gas piping.
5. Reset the safety switch by pushing in and then releasing the green safety switch button.
6. If the system has a standing pilot, make sure the pilot link (Fig. 7) is removed and the pilot is lit.

CHECKOUT REQUIRED

Before the installation is complete, satisfactorily perform all checkout tests indicated below.

Flame Current Check (all installations).

Pilot Turndown Test (all installations that require proof of pilot before main fuel valve is opened).

Safe Shutdown Checks—Flame failure, power failure, limit action (all installations).

Hot Refractory Hold-In (photocell applications only).

FLAME CURRENT CHECK

The flame current check is the best indicator of proper flame detector application. Perform the check at the time of installation, at any time service is done on the system, and at least once a month or more often while the system is in operation. This prevents shutdowns due to poor flame signal.

Perform test by connecting a W136 (or equivalent) microammeter in series with the flame detector and reading the flame signal while the burner is operating.

Insert a 196146 Meter Connector Plug, wired color-to-color to the W136A leadwires, into the test jack on the RA890F. This automatically puts the microammeter in series with the flame detector.

If a meter connector plug is not available, disconnect the flame detector lead from the F terminal; then connect this lead to the Black lead of the microammeter, and connect the Red lead of the microammeter to the F terminal.

When reading the flame current, assure the following criteria are met:

1. The flame current is steady; meter does not vary more than a needle width.
2. The flame current is at least two microamperes for a rectification type detector like used with the RA890F. The normal operating range is 2 to 5 microamperes.

IF A STEADY READING OF AT LEAST MINIMUM STRENGTH CANNOT BE OBTAINED, ONE OR MORE OF THE FOLLOWING CONDITIONS CAN EXIST:

- Improper supply voltage.
- Defective flame detector wiring including:
  — Open circuits.
  —Short circuits.
  — High resistance shorts caused by moisture, accumulated dirt, or improper choice of detector leadwire for the particular installation.
- Improper sighting, improper viewing window, or dirty viewing window for optical detectors.
- Improper application of a flame rod including:
  — Insufficient ground area.
  — Poor location of flame rod in flame.
  — Excessive heat on flame rod insulator (greater than 600°F (316°C).
  — Ignition interference.
- Improper application of a vacuum photocell, including:
  — Temperature over 165°F (74°C) at photocell.
  — Dirty photocell envelope.
- Defective sensor.

Fig. 8—Connecting meter to read flame current.

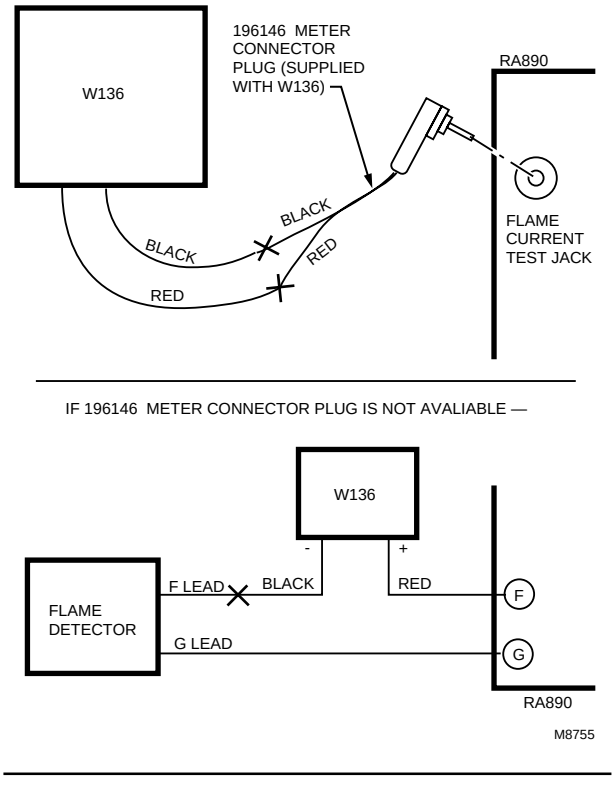

PILOT TURNDOWN TEST

CAUTION

The pilot turndown test should be performed only by qualified personnel and the instructions should be followed carefully.

On systems that prove a pilot before the main fuel valve can be opened, perform a pilot turndown test to prove that the main burner can be lighted by the smallest pilot that will hold in the flame relay. Perform a flame current check before and after the pilot turndown test.

1. Open the main power switch.
2. Shut off the fuel supply to the main burner only by closing the manual main burner shutoff cock. Do not shut off the fuel supply to the pilot valve.
3. Restore power to the relay.
4. Start the system by raising the setpoint of the controller (or pressing the Start button). The pilot will light and pull in the flame relay.
5. Reduce the size of the pilot flame to the turndown condition by slowly closing the manual valve on the pilot gas line. At the turndown condition, the pilot will be small enough to just hold in the flame relay (2K).
   a. Turn down the pilot until relay 2K drops out.
   b. Slowly turn up the pilot again just until relay 2K pulls back in.
   c. Again turn down the pilot slightly, but not enough so the relay drops out.

If the relay drops out again, simply turn up the pilot and try again. The closer the pilot is to the dropout condition, the more conclusive the test will be.

6. Check that the pilot is lit and relay 2K is pulled in.
7. Open the manual main burner shutoff cock. Main flame should light smoothly within one second. If the burner does not light within one second, close the shutoff cock and shut off power to the relay. Proceed to step 9.
8. If the burner lights, repeat step 7 two or three times to verify smooth lightoff.
9. If the lightoff is unsatisfactory, readjust the flame detector to require a larger pilot flame to hold in the flame relay. This usually requires:
   a. Resighting an ultraviolet or photocell type detector farther out on the axis of a pilot flame, or
   b. Adjusting a flame rod detector so that a larger minimum pilot is required.

CAUTION

If the pilot needs to be adjusted and rechecked, allow five minutes for the purge of unburned gases in the firebox before proceeding to the next step.

10. Repeat the entire turndown test until the flame is established promptly in step 7.
11. Turn up the pilot to full flame at the completion of the test. Perform a flame current check before leaving the job.

SAFE SHUTDOWN CHECKS

Limit Action

With the burner operating, lower the high limit setting to simulate an overheated boiler or furnace. Normal shutdown should occur. Restore the normal limit setting and the burner should restart.

Use manual reset limits with the RA890F to prevent the system from cycling off the high limit and to assure that the condition that causes the limit action is detected as soon as possible.

Flame Failure

With the burner operating, close the manual fuel valves to simulate a flame failure. System should lock out in safety switch timing (15 or 30 seconds). After the safety switch cools, open the manual valves and reset the safety switch. The burner should restart.

Power Failure

With the burner operating, open and then immediately close the line switch to simulate a power failure. Burner should shut down. After a short delay for component check, burner should restart and operate normally.

HOT REFRACTORY HOLD-IN (PHOTOCELL OIL INSTALLATION ONLY)

If hot refractory holds in the flame relay at the end of the burner-on cycle, the system cannot restart until the relay drops out. Check for hot refractory hold-in by observing the flame relay for immediate dropout at the end of a long burner-on period. If the relay does not drop out, resight the photocell so it does not sight the refractory, or decrease photocell sensitivity using aperture disks or filters.

NOTE: At the completion of all checkout tests, make sure that the RA890 is not on safety lockout, that the pilot is turned up to its normal level, and that all limit settings are correct. Operate the system through one normal cycle before leaving the installation.

Service

GENERAL SERVICE

1. Only qualified personnel should attempt to service heating equipment or controls.
2. Perform all checks required in the Checkout section when replacing the RA890, or when relighting or restoring power to the system after shutdown.
3. The captive mounting screws carry current; always disconnect power before loosening or tightening the mounting screws.
4. On each service call, check the controller for the approximately correct calibration and differential; assure that it is mounted securely. (See controller instructions.)
5. Never use oil on any part of the RA890F.
6. When cleaning the burner, clean the flame detector.
7. *Do not manually push in the RA890 relays*. This may damage the relays and it is an unsafe practice because it overrides the protective features of the relay. Clean relay contacts only as instructed below.

PERIODIC MAINTENANCE

The specific maintenance schedule setup depends on several factors including type of equipment being controlled, operating conditions (dirt and heat especially), cost of a nuisance shutdown, etc. The following should be included in any program:

1. Replace the vacuum tubes in the C7012 Flame Detector (when used) annually.
2. Perform a flame failure check and pilot turndown test whenever the burner is serviced, and at least annually.
3. Inspect and clean the detector and any viewing windows as often as required by soot accumulation and heat conditions at the detector.
4. Perform a flame current check at least monthly and more often when a shutdown may be costly.
5. Clean contacts only when required by failure to operate properly.

CONTACT CLEANING

Clean the relay contacts on the RA890 only when required and then only with Honeywell part no. 132569 Contact Cleaner. The contact cleaner comes in pressurized spray cans; directions for its use are printed on the can. Do not use other commercial contact cleaners. Most cleaners tested were found to leave deposits on the contact surfaces or to attack RA890 chassis parts.

Troubleshooting

When trouble occurs in the heating system and its cause is not immediately apparent, the service technician can apply the following step-by-step checkout to locate the cause of most problems. Refer to Fig. 3 and 4 for terminal locations, and to Fig. 6 for location of component parts.

CAUTION

Use extreme care troubleshooting the RA890F; line voltage can be present on most terminals when power is on.

TEST STANDBY OPERATION

1. Set controller not to call for heat.
2. Reset the safety switch by pushing in and then releasing the green safety switch reset button.
3. Close the line switch.
4. Check for line voltage at terminals 2 and 6. (Voltage will be zero when a line voltage controller is used; check for line voltage when controller is set to call for heat.)
   a. Voltage must be within +10 to -15 percent of the rated voltage.
   b. When voltage is zero (with low voltage controller), be sure limit switch contacts are closed and check power supply. Check for blown fuses, open circuit, or open disconnect switch.
5. Check position of flame relay. (When a line voltage controller is used, observe the action of the flame relay on a call for heat.)
   a. If the flame relay is out, proceed to step 6.
   b. If the flame relay is pulled in, check for a flame simulating condition.
      (1) Insert flame simulator plug or part no. 196146 Cable Plug into the test jack; do not ground the other end.
      (2) If flame relay holds in, replace the RA890.
      (3) If flame relay drops out, trouble is in the flame detector or external circuit. Check for light reaching the photocell, hot refractory hold-in, or defective wiring.

TEST STARTING OPERATION

6. Set controller to call for heat . (If control uses a line voltage controller, go back to steps 4 and 5.)
7. Observe load relay for pull-in.
   a. Load relay pulls in to light pilot and start burner—proceed to step 11.
   b. Load relay does not pull in—proceed to step 8.
   c. Load relay pulls in but does not light or burner does not start—proceed to step 10.
8. Check line voltage controller, if used, and the limit; if the load relay does not pull in, check again for power at

terminal 6 with the controller calling for heat. If there is power at terminal 6 and a line voltage controller is used, clean all relay contacts. Replace the RA890 if the relay still does not pull in. If a low voltage controller is used, proceed to step 9.

9. Check low voltage controller, if used, by jumping T-T.
   a. Load relay pulls in with T-T jumpered; check controller and external circuit.
   b. Load relay does not pull in with T-T jumpered; clean all relay contacts. Replace the RA890 if the load relay still does not pull in.
10. If the load relay pulls in but the pilot will not light or the burner will not start, check voltage at terminals 3-2 or 4-2.
   a. If no voltage at terminals 3-2 or 4-2 clean relay contacts. Replace the RA890 when trouble cannot be corrected.
   b. If normal line voltage at terminals 3-2 or 4-2, check external burner, ignition, and valve circuits. Check wiring, burner adjustment, ignition system including electrode spacing and location, oil quality, character and efficiency of oil atomization, fuel supply pressure, flame pattern, flame character and quality, pilot location with respect to main burner, flame detector, or other conditions that may delay lightoff.

TESTING FLAME DETECTING FUNCTION

11. Observe the flame relay (right relay) for pull-in when flame is established.
   a. Flame relay pulls in; proceed to step 13.
   b. Flame relay does not pull in; proceed to step 12.
12. Check the flame relay with a 121708 Flame Simulator if available (follow the instructions with the simulator), or check the following:
   a. Perform a flame current check according to the flame current check section.
   b. If the current is satisfactory, replace the RA890.
   c. If the current is not satisfactory, check all items listed in the Flame Current Check section.

OBSERVE SEQUENCING OPERATION

13. Observe the second stage oil valve or main gas valve for opening when flame relay pulls in.
   a. If valve does not open, check for line voltage at terminals 2-5.
      (1) Normal voltage—check valve and valve circuit.
      (2) Zero voltage—clean relay contacts. Replace the RA890 if this does not correct the problem.
14. Observe ignition for cutoff when flame relay pulls in when connected to terminal 4.
   a. If ignition stays on and wiring checks out, replace the RA890.

MISCELLANEOUS PROBLEMS

Relay Chatter

Load relay chatter can result from extreme low voltage (notify power company) or from a loose connection (tighten).

Flame relay chatter may result from improper combustion (adjust burner) or soot or carbon on flame detector (clean, and correct the cause).

Difficulty Resetting Safety Switch (30 Second Safety Switch Models)_

Ambient temperature may be below +10°F (-12°C). Problem is corrected by warming the safety switch.

Repeated Lockouts Or Control Failures

The most common causes of repeated failures of the control or flame detector or repeated lockouts are:

a. High ambient temperatures—over 125°F (52°C). Subtract 10°F (6°C) for alarm contacts and 10°F (6°C) for 50 Hz operation.
b. Supply voltage variation greater than +10 to -15 percent.
c. Electrical overloading of the contacts.
d. Marginal microampere signal.
e. Frequent cycling with high ambient temperatures.

IGNITION INTERFERENCE (Flame Rod Detectors Only)

Ignition interference is a false signal from a spark ignition system superimposed on the flame signal. The interference may be additive or subtractive (increases or decreases the flame current), and in some instances may be sufficient to destroy the electronic network of the RA890E. The RA890F network is protected against interference by the arc gap shown in Fig. 7.

The arc gap conducts at high voltage levels. It also glows when it conducts, providing a visual indication that interference is occurring. This prevents the control from operating and causes a shutdown.

Ignition interference (below the arcing level) can be determined by measuring the flame current with ignition and pilot on, and then with only pilot on. Any significant difference may indicate interference.

IMPORTANT: *When an RA890F replaces an RA890E, there may be installations where ignition interference is not sufficient to destroy the RA890E, but is sufficient to prevent operation of the RA890F due to its arc gap protection. Be very suspicious of ignition interference on any installation where the RA890E operates and the RA890F does not.*

HOW TO ELIMINATE INTERFERENCE (Tabulated in Order of Importance)

1. Provide adequate flame grounding area.
2. Be sure the ignition electrode and the flame rod are on opposite sides of the grounding area.
3. Check for correct spacing on the ignition electrode. Spacing should be 1/16 in. to 3/32 in. (1.6 to 2.4 mm) for 6,000V systems and 1/8 in. (3.2 mm) for 10,000V systems.
4. Eliminate any marginal spacing at other areas along the lead routes. Replace any deteriorated leads.

Honeywell

Home and Building Control
Honeywell Inc.
1985 Douglas Drive North
Golden Valley, MN 55422

Home and Building Control
Honeywell Limited—Honeywell Limitée
740 Ellesmere Road
Scarborough, Ontario
M1P 2V9

Helping You Control Your World

QUALITY IS KEY

Printed in U.S.A.