Honeywell

MODUTROL MOTORS

M744S,T,Y
M745S,T,Y

M744 AND M745 MODUTROL MOTORS ARE LINE VOLTAGE MOTORS USED TO CONTROL VALVES AND DAMPERS. THESE MOTORS ACCEPT A CURRENT SIGNAL FROM A PROPORTIONAL CONTROLLER. MOTOR POSITIONS THE VALVE OR DAMPER (WITH SUITABLE LINKAGE) AT ANY POINT BETWEEN FULL OPEN OR FULL CLOSED AS DETERMINED BY THE INPUT FROM THE CONTROLLER.

- ☐ M744 motors are normally closed, nonspring-return motors. When power fails, these motors will retain their last position.
- ☐ M745 motors are normally closed spring-return motors. On a power loss motor will spring return to full closed position.
- ☐ M744S and M745S models accept a 4-20 mA input signal from the controller.
- ☐ M744T and M745T motors include two auxiliary switches (spdt) and accept a 4-20 mA signal.
- ☐ M744Y and M745Y motors include two auxiliary switches (spdt). These motors accept 4-20 mA signal and incorporate adjustable zero and span for split range applications.
- ☐ Drive up to 6 motors in unison without the addition of resistor kit.
- ☐ Sequence up to 6 M744Y/M745Y motors without adding resistor kit.
- ☐ Stroke is fixed at 90° or 160°.
- ☐ Direct drive feedback potentiometer provides accurate motor positioning.
- ☐ Oil immersed gear train for long life.
- ☐ Internal transformer included for 120 Vac power supply.
- ☐ Weatherproofing kit and explosion-proof housing are available.
- ☐ Uses standard Modutrol motor accessories, including damper and valve linkages.

M.N.
10-85●

Form Number 63-2053—2

SPECIFICATIONS

MODELS:

M744S—line voltage, proportional, nonspring-return, without auxiliary switches.

M744T—line voltage proportional, nonspring-return, with two auxiliary switches.

M744Y—line voltage, proportional, nonspring-return, with two auxiliary switches and adjustable zero and span.

M745S—line voltage, proportional, spring-return, without auxiliary switches.

M745T—line voltage, proportional, nonspring-return, with two auxiliary switches.

M745Y—line voltage, proportional, spring-return, with two auxiliary switches and adjustable zero and span.

ELECTRICAL RATINGS:

Voltage and Frequency—120 Vac, 50/60 Hz.

Electrical Consumption—

M744: 23 W, 0.24 A.

M745: 28 W, 0.28 A.

CONTROLLER: These motors can be used with any electronic controller that provides a stable noise-free proportional current output as specified by the model designation.

M744/M745S,T,Y models accept 4-20 mA.

M744/M745S,T—maximum controller current is 25 mA.

M744/M745Y—maximum controller current is 50 mA.

INPUT RANGE:

M744/M745S,T—4-20 mA nominal.

M744/M745Y—4-20 mA adjustable.

Zero (motor closed)—0.8 to 18 mA.

Span—1.8 to 20 mA (adjustable).

INPUT IMPEDANCE: 100 ohms.

MOTOR ROTATION: Normally closed. The closed position is the limit of the counterclockwise rotation as viewed from the power end of the motor. See Figure 2. Motor opens clockwise as viewed from the power end.

STROKE: Fixed, 160° or 90° stroke.

TIMING:

30 sec at 90° stroke.

60 sec at 160° stroke.

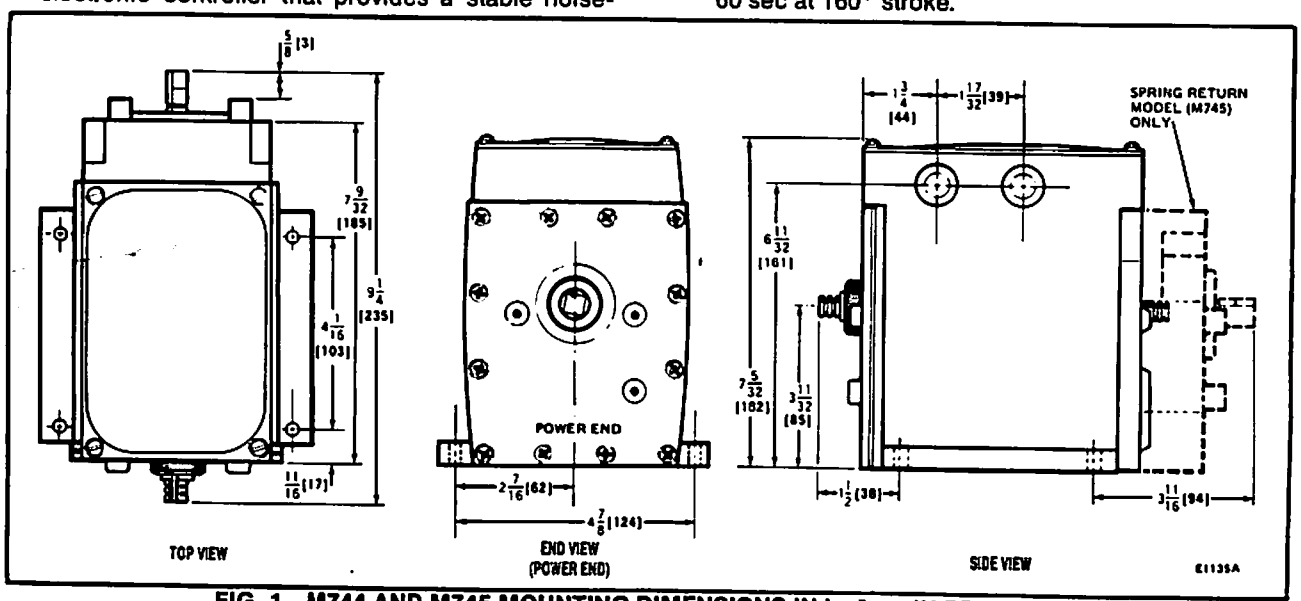

FIG. 1—M744 AND M745 MOUNTING DIMENSIONS IN in. [mm IN BRACKETS].

ORDERING INFORMATION

WHEN PURCHASING REPLACEMENT AND MODERNIZATION PRODUCTS FROM YOUR LOCAL HONEYWELL SALES OFFICE, WHOLESALER OR DISTRIBUTOR, REFER TO THE TRADELINE OR PCD CATALOG FOR COMPLETE ORDERING NUMBER AND SPECIFY—

1. Order number. 2. Accessories, if desired.

IF YOU HAVE ADDITIONAL QUESTIONS, NEED FURTHER INFORMATION, OR WOULD LIKE TO COMMENT ON OUR PRODUCTS OR SERVICES, PLEASE WRITE OR PHONE:

1. HONEYWELL PROCESS CONTROL DIVISION, FT. WASHINGTON, PA 19034.

2. RESIDENTIAL DIVISION CUSTOMER SERVICE
HONEYWELL INC.
1885 DOUGLAS DRIVE NORTH
MINNEAPOLIS, MN 55422-4386 (612)542-7500

(IN CANADA—HONEYWELL LIMITED/HONEYWELL LIMITEE, 740 ELLESMERE ROAD, SCARBOROUGH, ONTARIO M1P 2V9). INTERNATIONAL SALES AND SERVICE OFFICES IN ALL PRINCIPAL CITIES OF THE WORLD.

BRAKE: Electromechanical; holds motor position when motor winding is de-energized and releases when motor winding is energized. On spring-return motors the brake releases when power is removed from the motor, and motor closes mechanically.

TORQUE:
M744: 150 lb.-in. [17 N·m].
M745: 50 lb.-in. [5.7 N·m].

DEADWEIGHT LOAD ON SHAFT:
Power End—200 lb. [90.7 kg] maximum.
Auxiliary End—
M744: 100 lb. [45.4 kg] maximum.
M745: 10 lb. [4.5 kg] maximum.

AMBIENT TEMPERATURE:
Maximum—130 F [54 C] at 25% duty cycle.
Minimum—M744: -40 F [-40 C].
M745: -35 F [-37 C].

CRANKSHAFT: Double-ended, 3/8 in. [9.5 mm] square.

DIMENSIONS: Refer to Fig. 1.

WIRING TERMINATION: 1/4 in. quick connect. 7640PU Screw Terminal Adaptor is included.

ACCESSORIES:
ES-640-117, ES-650-118, DHE-94 Explosion-proof Housings enclose the motor for use in explosive atmospheres. Not for use with Q618, Q601, and Q445 linkages.
7640JS Weatherproof Kit for M744S,T,Y.
7640JT Weatherproof Kit for M745S,T,Y.
7616BR Motor Crank Arm—included with Q605 but not with motor.
Q607 Auxiliary Switch—controls auxiliary equipment as a function of motor position.
Q605 Damper Linkage—connects motor to damper, includes motor crankarm.
Q618 Linkage—connects Modutrol motor to water or steam valve.
Q601 Linkage—connects Modutrol motor to water or steam valve.
Q100 Linkage—connects Modutrol motor to butterfly valve.

INSTALLATION

WHEN INSTALLING THIS PRODUCT. . .

1. Read these instructions carefully. Failure to follow them could damage the product or cause a hazardous condition.
2. Check the ratings given in the instructions and on the product to make sure the product is suitable for your application.
3. Installer must be a trained, experienced service technician.
4. After installation is completed, check out product operation as provided in these instructions.

CAUTION

1. Disconnect the power supply before connecting the wiring to prevent electrical shock or equipment damage.
2. Mount the motor with the crankshaft in the horizontal position.
3. Do not attempt to turn the motor shaft by hand or with a wrench; damage to the gear train will result.

LINKAGES

For detailed instructions on the assembly of specific linkages, refer to the instruction sheet packed with each linkage.

When planning and installing a motor and linkage, check the following points of operation:

1. Attach the linkage to the motor shaft so the motor crank arm travels through its full range while the valve or damper moves through its full distance.
2. The motor must be stopped at the end of its stroke by the limit switch and must not be stalled by the damper or valve.
3. Do not exceed the load and torque ratings in any application.
4. Best control is achieved with maximum damper opening of about 60°.

LOCATION

Install the motors in any location except where acid fumes or other deteriorating vapors might attack the metal parts, or in atmospheres of explosive vapors.

If located outdoors, use weatherproofing kit: see Accessories.

MOUNTING

Install the motor with the crankshaft horizontal. Mounting flanges extending from the bottom of the motor housing have clearance holes for 1/4 inch machine screws or bolts.

These motors are supplied without crank arms. A crank arm is included in the Q605 linkage, or it may be ordered separately (see Accessories). The motor is supplied with the shaft in the full closed (counter-clockwise position). The angle between full closed and full open position is 90° through 160°. Refer to Fig. 2.

Attach crank arm to motor so that it will be free to turn through the full stroke without interfering with the mounting surfaces.

WIRING

Disconnect the power supply before connecting wiring to prevent electrical shock and equipment damage. All wiring must comply with applicable local codes, ordinances, and regulations.

Make sure that the power requirements stamped on the motor correspond to the characteristics of the power supply.

Motor terminals are quick-connect, located on the top of the printed circuit board. Refer to Fig. 3. To gain access to the terminals for wiring, remove screws on the top of the motor and remove the cover. A screw terminal adapter is supplied with the motor to convert quick-connect terminals to screw terminals. See Fig. 4.

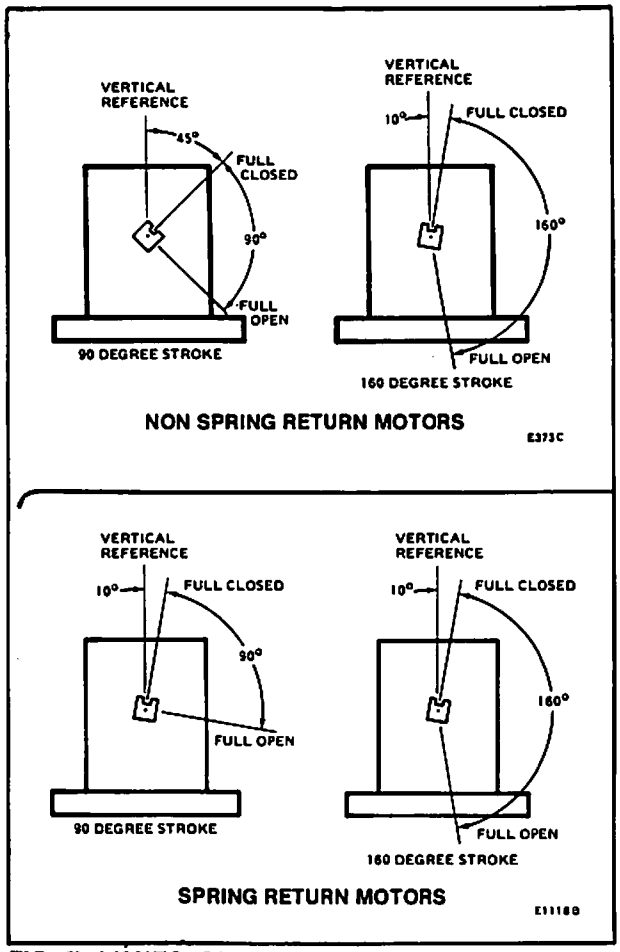

FIG. 2—LIMITS OF CRANK ARM ROTATION FOR M744, M745 MOTORS, VIEWED FROM POWER END.

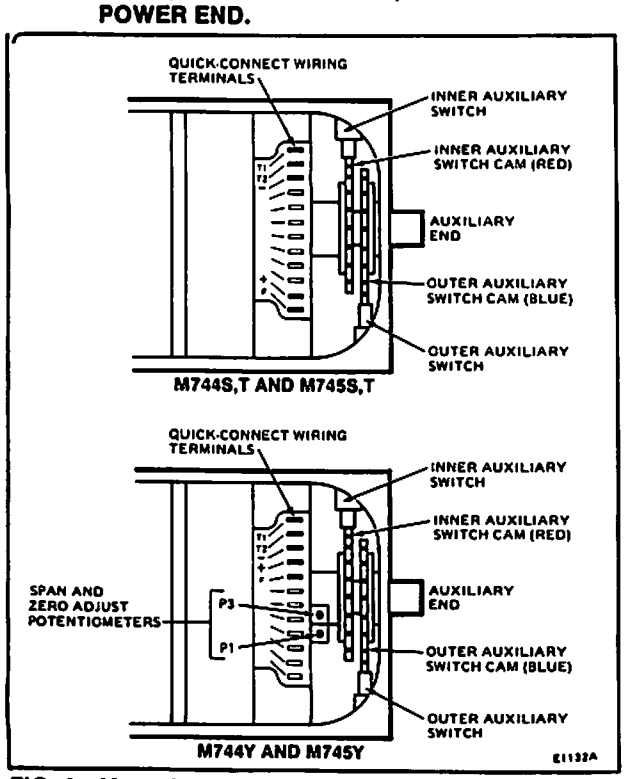

FIG. 3—M744S,T,Y AND M745S,T,Y TERMINAL LOCATIONS.

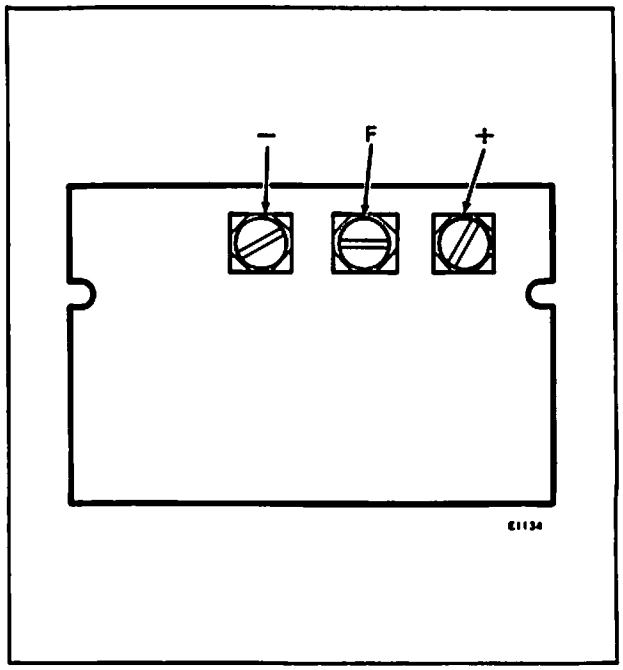

FIG. 4—7640PU SCREW TERMINAL ADAPTER.

CONNECTION DIAGRAMS

These motors are designed to be used in a current proportioning control circuit. Connect the positive terminal of the controller to the positive motor terminal and the negative terminal to the negative motor terminal. The motor will be closed at the zero end of the operating span. As the current increases to the full operating span, the motor will drive open (to clockwise limit). Drive the motor full open by connecting terminal F to either the positive or negative motor terminal. Refer to Fig. 6. The internal wiring of these motors is shown in Fig. 5. Refer to Figs. 6 and 7 for connecting a controller to one or more motors.

CAUTION

Modutrol motors with electronic circuits are designed to ignore the presence of electrical pickup (unwanted input signals) and will work with standard wiring used with other Modutrol motors. However, there may be rare cases in which very large pickup is present, such that motor performance may be affected. This may happen when the motor wires are run near conductors carrying large electrical currents (to large motors). Reroute controller wires away from these conductors or use twisted cable (Belden type 8443-3, or equivalent) to ensure proper control. If shielded cable is used, the shield must not be grounded.

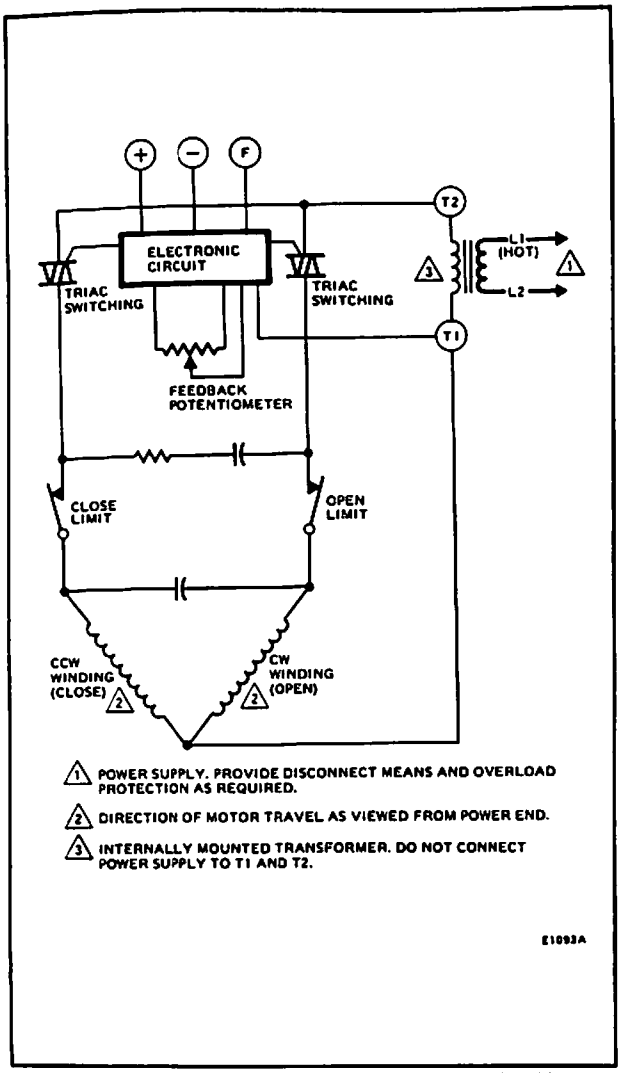

FIG. 5—INTERNAL SCHEMATIC OF M744S,T,Y AND M745S,T,Y MOTORS.

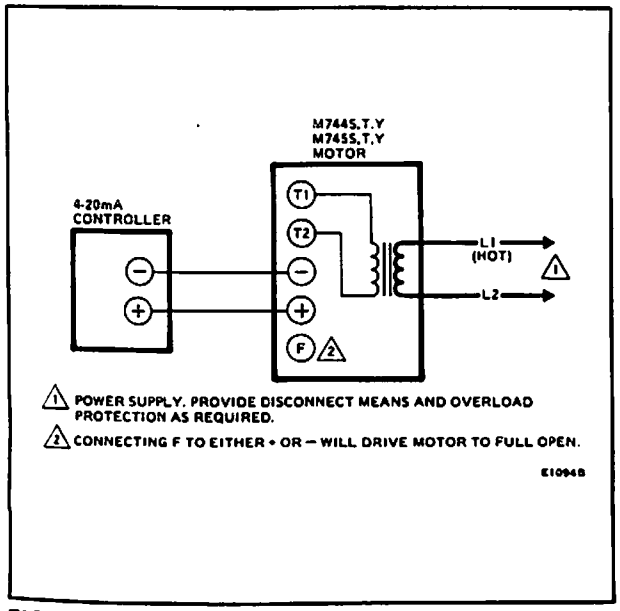

FIG. 6—M744S,T,Y OR M745S,T,Y CONNECTED TO A 4-20 mA CURRENT CONTROL.

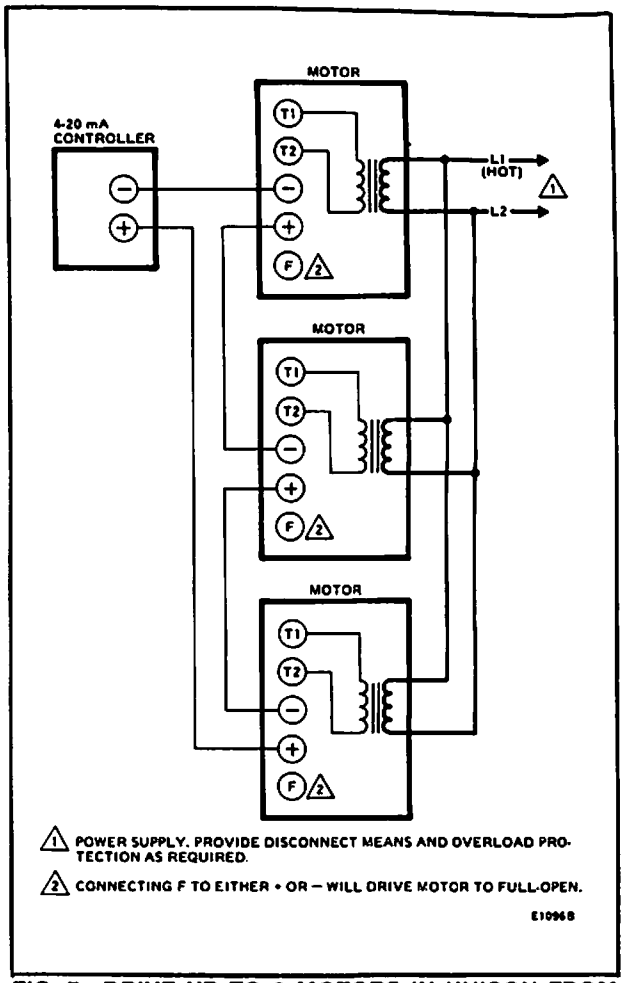

FIG. 7—DRIVE UP TO 6 MOTORS IN UNISON FROM ONE CONTROLLER. M744Y/M745Y MODELS CAN BE DRIVEN SEQUENTIALLY BY ADJUSTING ZERO AND SPAN ADJUSTMENT POTENTIOMETERS.

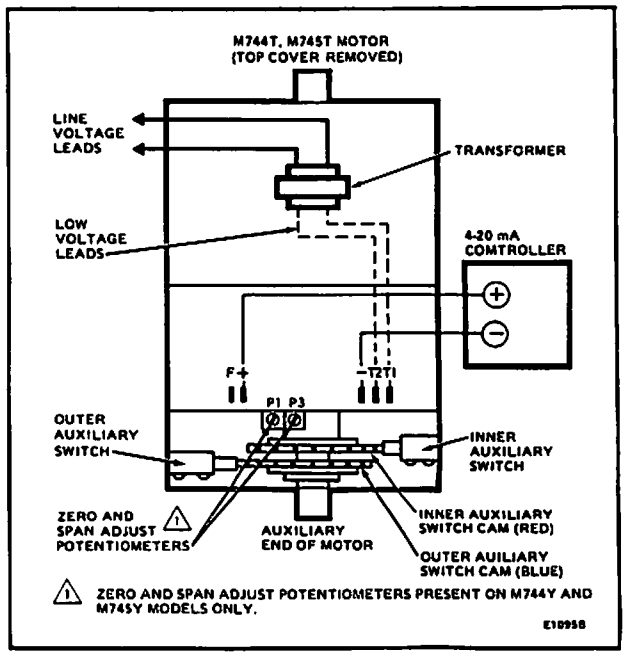

FIG. 8—INTERNAL VIEW OF MOTOR WITH TOP COVER REMOVED.

SETTINGS AND ADJUSTMENTS

ADJUSTMENTS

ZERO AND SPAN ADJUSTMENT FOR M744Y/M745Y MOTORS

1. Refer to Fig. 8, adjust the zero potentiometer (P3) fully clockwise (maximum zero) and the span potentiometer (P1) fully counterclockwise (minimum span).

2. Set the controller current to the value required to drive the motor to the closed position.

3. Turn the zero potentiometer (P3) slowly counterclockwise until the motor begins to open. This is defined as the zero setting.

4. Set the controller current to the value required to drive the motor to the full open position. The motor will open.

5. Turn the span potentiometer (P1) clockwise until the motor starts to close. The difference between the full (open) span position current and the zero position current is defined as the operating span.

6. Re-check the zero and readjust the zero potentiometer (P3) if necessary. Turn (P3) clockwise to increase the zero position.

7. Re-check the span and readjust the span potentiometer (P1) if necessary. Turn (P1) clockwise to increase the full span position.

8. For sequential operation (as shown in Fig. 9), repeat above steps for each motor.

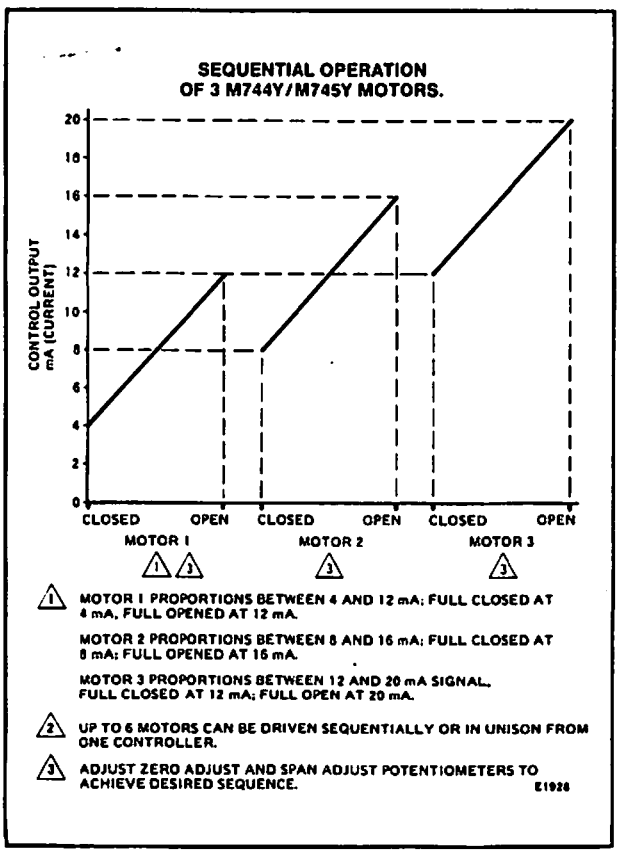

FIG. 9—SEQUENTIAL OPERATION OF 3 M744Y/M745Y MOTORS.

AUXILIARY SWITCHES

The auxiliary switches in M744/M745T,Y motors are actuated by adjustable cams. These cams can be set to actuate the switches at any angle within the stroke of the motor. Also, switch differentials of 1° or 10° can be selected.

Motors are shipped in the closed position with auxiliary cams set to actuate switches 30° from the closed position, and to provide 1° differential. With motor in closed position, auxiliary switch breaks R-B (Fig. 10).

AUXILIARY SWITCH SETTING PROCEDURE (Fig. 10)

1. Remove the four cover screws on the top of the motor and remove the cover to gain access to motor terminals and the cams (Fig. 8).

2. Disconnect the motor from the controller. Connect a current source to the (+) positive and (−) negative motor terminals (Fig. 8).

CAUTION

The brown cam on 90° stroke M745T,Y or two yellow cams on 90° stroke M744T,Y are factory adjusted stroke cams and must not be rotated when setting auxiliary switches.

3. Drive the motor to the desired position where auxiliary equipment is to be switched by adjusting the current source.

4. Insert a 1/8 in. straightedge screwdriver into slot on cam associated with selected auxiliary switch. See Fig. 10 for switches and associated cams. Move top of the screwdriver as far as possible and repeat in successive slots, moving cam until switch contacts make. Direction of cam adjustment depends on selected differential (1° or 10°).

5. For switch differential of 1°, check continuity of auxiliary switch R-B contacts and rotate cam as follows:
   a. If contacts are open, rotate cam counterclockwise until R-B contacts close.
   b. If contacts are closed, rotate cam clockwise until R-B contacts open.

6. For switch differential of 10°, check continuity of auxiliary switch R-B contacts and rotate cam as follows:
   a. If contacts are open, rotate cam clockwise until R-B contacts close.
   b. If contacts are closed, rotate cam counterclockwise until R-B contacts open.

7. Check for proper differential and switching of auxiliary equipment by driving motor through full stroke (in both directions, using the current source. If necessary, repeat differential adjustments.

8. Disconnect current source, reconnect controller and replace top cover on motor.

IMPORTANT

Do not turn motor shaft by hand or with a wrench, as damage to the gear train will result.

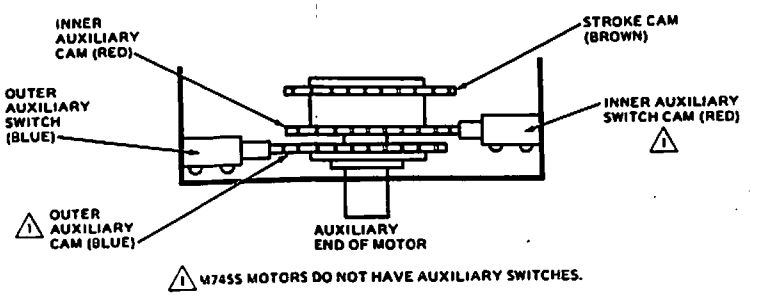

STROKE CAM — SPRING RETURN MOTORS — 90° STROKE ONLY

E1764A

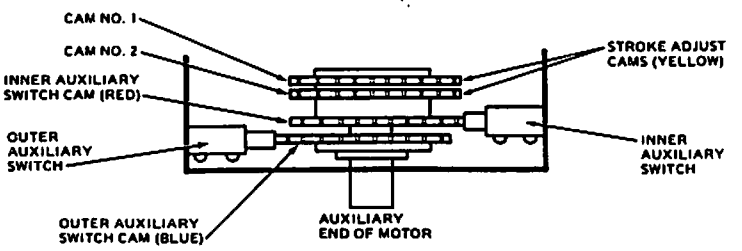

STROKE CAMS — NON-SPRING RETURN MOTORS — 90° STROKE ONLY

E1765A

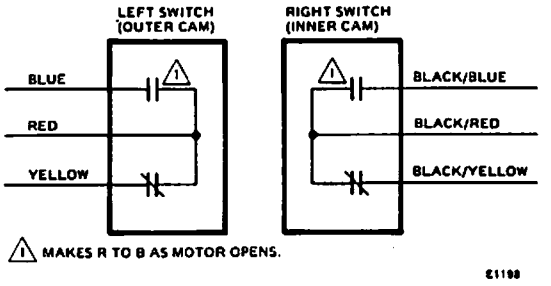

E1198

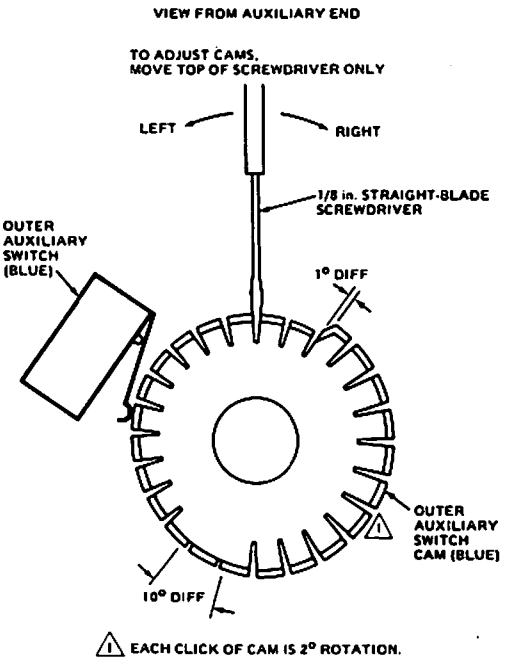

VIEW OF CAM FROM AUXILIARY END OF MOTOR

E1119A

FIG. 10—AUXILIARY SWITCH AND STROKE CAM ADJUSTMENT.

OPERATION AND CHECKOUT

The motor feedback potentiometer and control current input circuit form a bridge circuit. As long as the final control element remains at the position proportional to the input current from the controller, the circuit is balanced, and the motor does not run. When the value of the controlled medium changes, the current from the controller changes, and unbalance is amplified to energize the triac switching to run the motor in the proper direction to correct the change in the temperature or pressure. The motor turns the feedback potentiometer to rebalance the circuit and stop the motor.

CHECKOUT

When the motor has been installed and the auxiliary switches have been adjusted, check the motor operation to ensure that the motor operates the valve or damper properly and that the motor responds accurately to the controller signal.

Inspect the motor, linkage and valve or damper to see that all mechanical connections are correct and secure. In damper installations, the pushrods should not extend more than a few inches past the ball joints. Check to see that there is adequate clearance for linkage to move through its stroke without binding or striking other objects.

Check that cams operate the auxiliary switches, if used, at the desired point of motor operation.

MOTOR OPERATION CHECK

1. To close the motor, open terminals +, −, and F.
2. To open the motor, jumper terminals F to + or F to −

SYSTEM CHECKOUT — HEATING SYSTEM

1. Adjust the set point of the controller above the ambient temperature. The motor should drive toward the open position.
2. Adjust the set point of the controller below the ambient temperature. The motor should drive toward the closed position.

After checkout, adjust the controller to the desired set point for system operation.

If questions arise regarding this product, contact your local distributor or local Honeywell sales office.

Honeywell Inc.
1885 Douglas Drive N.
Golden Valley, MN 55422-4386

International Sales Offices in all principal cities of the world. Manufacturing in Australia, Canada, Finland, France, Germany, Japan, Mexico, Netherlands, Spain, Taiwan, United Kingdom, U.S.A.

PRINTED IN U.S.A.

Honeywell

MODUTROL MOTORS

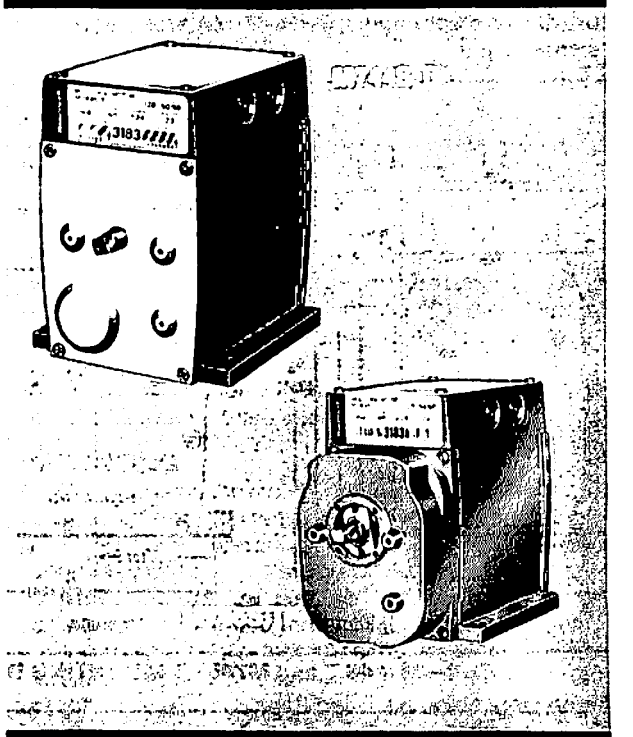

M744S,T M745S,T

THE M744S, M744T, M745S, M745T ARE LINE VOLTAGE MOTORS USED TO CONTROL VALVES AND DAMPERS. THESE MOTORS WILL ACCEPT A 4-20 mA SIGNAL FROM A PROPORTIONAL CONTROLLER. THE MOTOR WILL POSITION THE VALVE OR DAMPER (WITH SUITABLE LINKAGE) AT ANY POINT BETWEEN FULL OPEN AND FULL CLOSED AS DETERMINED BY THE INPUT FROM THE CONTROLLER. THE ELECTRONIC CIRCUIT ELIMINATES BALANCING RELAY CONTACTS THAT CAUSE CHATTER DUE TO EXCESSIVE VIBRATION.

- ☐ M744S and M744T motors are normally closed nonspring-return motors. When power fails, these motors will retain their last position.
- ☐ M745S and M745T motors are normally closed spring-return motors. When power fails, these motors will reset to the full closed position.
- ☐ M744S and M745S motors are supplied without auxiliary switches.
- ☐ M744T and M745T motors are supplied with 2 adjustable auxiliary switches.
- ☐ Motor stroke is fixed at 90 degrees or 160 degrees.
- ☐ Rated for ambient temperatures of −40 F to 130 F [−40 C to 54 C].
- ☐ Direct drive feedback potentiometer for accurate positioning of the motor by its electronic circuit.
- ☐ Oil-immersed gear train for long life.
- ☐ Tapped output shaft.
- ☐ Internal transformer provides direct 120 Vac application.
- ☐ Weatherproofing kit and explosion-proof housing are available.
- ☐ Uses standard Modutrol motor accessories, including damper and valve linkages.

G.P.
9-83●

Form Number 63-2053

SPECIFICATIONS

MODELS:
- M744S—line voltage, proportional, nonspring return, without auxiliary switches.
- M744T—line voltage, proportional, nonspring return, with 2 adjustable auxiliary switches.
- M745S—line voltage, proportional, spring return, without auxiliary switches.
- M745T—line voltage, proportional, spring return, with 2 adjustable auxiliary switches.

ELECTRICAL RATINGS:
- Voltage and Frequency—120 Vac, 50/60 Hz.
- Power Consumption—23 W.
- Current Draw—0.24 A.

CONTROLLER:
- Series 70 electronic control circuit provides 4-20 mA input range.
- Motors can be used with any electronic controller that provides a stable, noise-free 4-20 mA proportional signal output.

INPUT RANGE: 4-20 mA nominal.
- Guaranteed Full Close—3.5 mA minimum.
- Start to Open—4.9 ± .9 mA.
- Guaranteed Full Open—21.0 mA maximum.
- Start to Close—18.7 ± 1.5 mA.

INPUT IMPEDANCE: 100 ohms.

REPOSITIONS: 55 ± 15.

MOTOR ROTATION:
- Normally closed. The closed position is the limit of counterclockwise rotation as viewed from the power end of the motor. See Figure 2. Motor opens clockwise (as viewed from the power end).

STROKE: Fixed, 160° or 90°.

TIMING:
- 35 seconds nominal at 90 ° stroke;
- 60 seconds nominal at 160 ° stroke.

BRAKE: Electromechanical; holds load when motor winding is deenergized and releases when motor winding is energized.

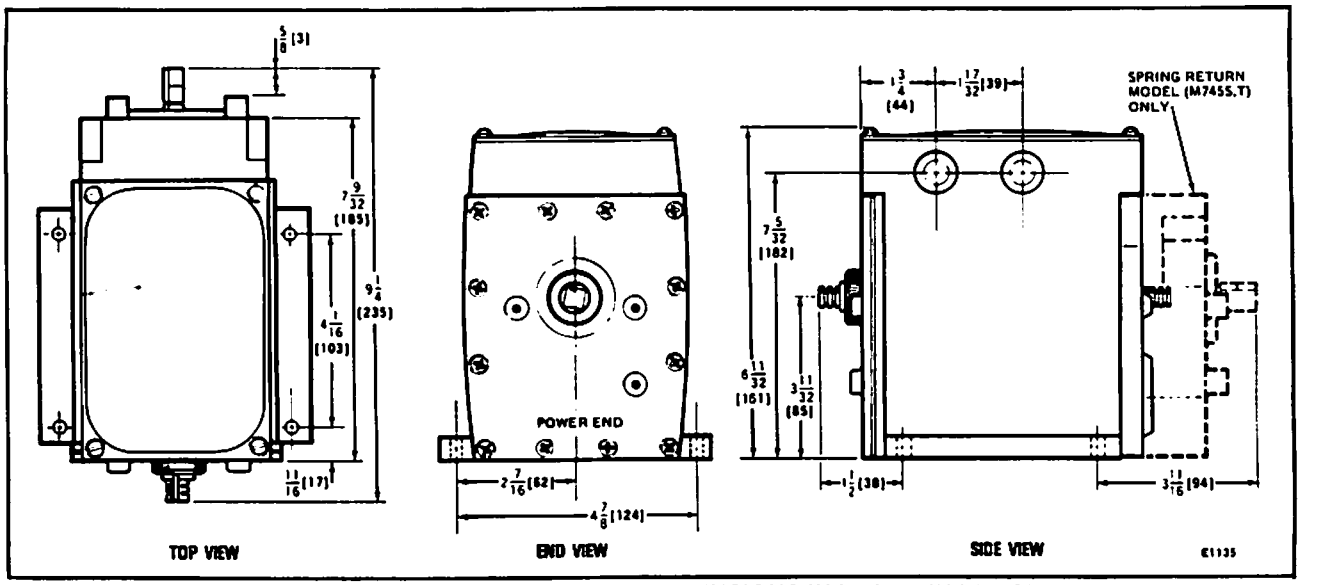

FIG. 1—M744S,T and M745S,T MOUNTING DIMENSIONS IN in. [mm IN BRACKETS].

ORDERING INFORMATION

WHEN PURCHASING REPLACEMENT AND MODERNIZATION PRODUCTS FROM YOUR LOCAL HONEYWELL SALES OFFICE, WHOLESALER OR DISTRIBUTOR, REFER TO THE TRADELINE OR PCD CATALOG FOR COMPLETE ORDERING NUMBER AND SPECIFY—

1. **Order number.**
2. **Accessories, if desired.**

IF YOU HAVE ADDITIONAL QUESTIONS, NEED FURTHER INFORMATION, OR WOULD LIKE TO COMMENT ON OUR PRODUCTS OR SERVICES, PLEASE WRITE OR PHONE:

1. **HONEYWELL, PROCESS CONTROL DIVISION, FT. WASHINGTON, PA 19034**

   or

2. **RESIDENTIAL DIVISION CUSTOMER SERVICE, HONEYWELL, INC., 1885 DOUGLAS DRIVE NORTH, MINNEAPOLIS, MN 55422-4386 (612)542-7500.**

   (IN CANADA—HONEYWELL LIMITED, 155 GORDON BAKER ROAD, WILLOWDALE, ONTARIO, M2H3N7). INTERNATIONAL SALES AND SERVICE OFFICES IN ALL PRINCIPAL CITIES OF THE WORLD.

OPERATING TORQUE: 150 lb.-in. [17 N·m].

BREAKAWAY TORQUE: (Crank Arm Loading) 300 lb.-in. [34 N·m]. Breakaway torque is available to overcome an occasional frozen or seized damper or valve. MOTOR MUST NOT BE USED CONTINUOUSLY AT THIS RATING.

DEADWEIGHT LOAD ON SHAFT:
Power End—200 lb. [90.7 kg] maximum.
Auxiliary End—100 lb. [45.4 kg] maximum.

AMBIENT TEMPERATURE:
Minimum—-40 F [-40 C].
Maximum—+130 F [54 C] at 25% duty cycle.

CRANKSHAFT: Double-ended, 3/8 in. [9.5 mm] square, tapped for 8-32 UNC screw.

GEAR TRAIN: Motorized gear train runs submerged in a special mineral oil.

DIMENSIONS: Refer to Fig. 1.

WIRING TERMINATION: Motor terminals are quick-connect type (1/4 inch). Part No. 7640PU is provided with the motor for adapting to screw-type terminals.

ACCESSORIES:
ES-650-117, ES-650-118, DHE-94, Explosion-proof Housings enclose motor for use in explosive atmospheres. Not for use with Q618, Q601, and Q445 linkages. See specification form 60-2013 for detailed information about explosion-proof housings.
7640JS Weatherproofing Kit for M744S,T.
7640JT Weatherproofing Kit for M745S,T.
7616BR Motor Crank Arm—included with Q605 but not with the motor.
Q181 Auxiliary Potentiometer—controls 1 or 2 additional series 90 (M944 or M945) motors or can be used for remote motor position monitoring.
Q607 Auxiliary Switch—controls auxiliary equipment as a function of motor position.
Q605 Damper Linkage—connects motor to damper, includes motor crankarm.
Q618 Linkage—connects Modutrol motor to water or steam valve.
Q601 Linkage—connects Modutrol motor to water or steam valve.
Q100 Linkage—connects Modutrol motor to butterfly valve.
Q68 Auxiliary Potentiometer—controls up to 5 additional series 90 (M944 or M945) motors or used for remote motor position monitoring.

INSTALLATION

WHEN INSTALLING THIS PRODUCT. . .

1. Read these instructions carefully. Failure to follow them could damage the product or cause a hazardous condition.
2. Check the ratings given in the instructions and on the product to make sure the product is suitable for your application.
3. Installer must be a trained, experienced service technician.
4. After installation is completed, check out product operation as provided in these instructions.

CAUTION

1. Disconnect the power supply before connecting wiring to prevent electrical shock and equipment damage.
2. Mount the motor with the crankshaft in horizontal position.
3. Do not attempt to turn motor shaft by hand or with a wrench; damage to the gear train will result.

LINKAGES

For detailed instructions on the assembly of specific linkages, refer to the instruction sheet packed with each linkage.

When planning and installing a motor and linkage, check the following points of operation:

1. Attach the linkage to the motor shaft so the motor crank arm travels through its full range while the valve or damper moves through only its required maximum distance.
2. The motor must be stopped at the end of its stroke by the limit switch and must not be stalled by the damper or valve.
3. Do not exceed the load and torque ratings in any application.
4. Best control is achieved with maximum damper opening of about 60 degrees.

LOCATION

Install the motors in any location except where acid fumes or other deteriorating vapors might attack the metal parts, or in atmospheres of escaping gas or other explosive vapors. Motors are rated for ambient temperatures between -40 F and +130 F [-40 C to +54 C]. If located outdoors, use weatherproofing kit; see Accessories section.

Choose a location which allows enough clearance for mounting accessories and servicing.

MOUNTING

Always install the motor with the crankshaft horizontal. Mounting flanges extending from the bottom of the motor housing have clearance holes for 1/4 inch machine screws or bolts.

These motors are supplied without crank arms. A crank arm is included in the Q605 linkage, or it may be ordered separately (see Accessories). The motor is supplied with the shaft in the full closed (counter-clockwise ↺) position. The angle between full closed and full open is 90° or 160°. Refer to Fig. 2 and 3. Attach crank arm to motor so it will be free to turn through the full stroke without interfacing with the mounting surfaces.

WIRING

Disconnect the power supply before connecting wiring to prevent electrical shock and equipment damage. All wiring must comply with applicable codes, ordinances, and regulations.

Make sure that the power requirements stamped on the motor correspond to the characteristics of the power supply.

The motor terminals are quick-connect type, located on the top of the printed circuit board. Refer to Fig. 4. To gain access to the terminals for wiring, remove screws on the top of the motor and remove the cover. A screw terminal adapter is supplied with the motor to convert the motor from the quick-connect terminals to screw terminals. See Fig. 5.

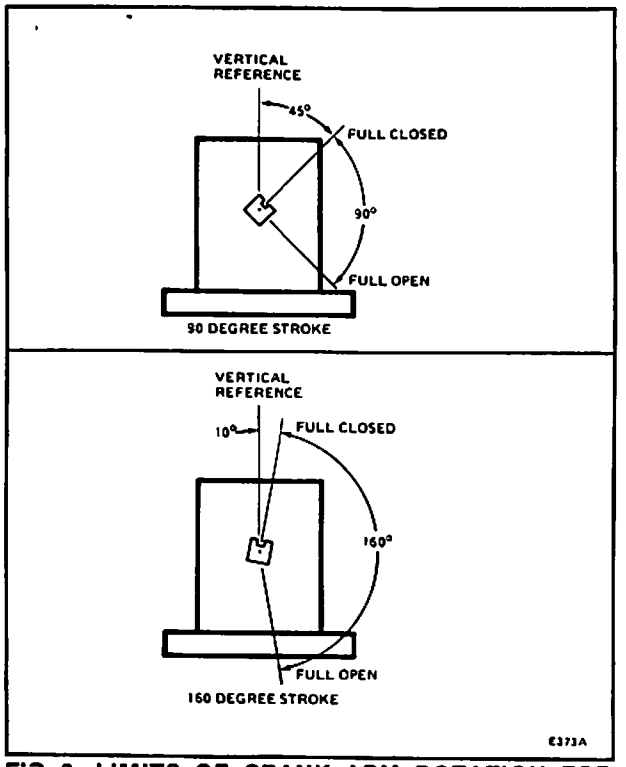

FIG. 2—LIMITS OF CRANK ARM ROTATION FOR M744S,T.

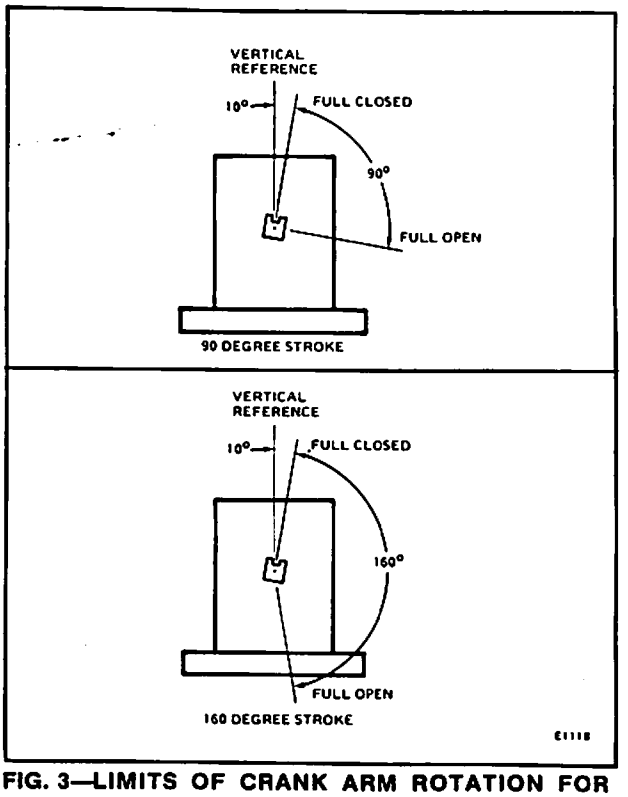

FIG. 3—LIMITS OF CRANK ARM ROTATION FOR M745S,T.

CONNECTION DIAGRAMS

These motors are designed to be used in a 4-20 mA proportioning control circuit. Connect the (+) positive terminal of the controller to the (+) positive motor terminal and the (−) negative motor terminal. At 4 mA or less, the motor will be closed (counterclockwise). As the current increases above 4 mA, the motor will drive open (clockwise). At 20 mA or greater, the motor will be open. The maximum allowable continuous control current is 30 mA. Connecting terminal F to either the (+) positive or (−) negative motor terminal will drive the motor full open. Refer to Fig. 4.

The internal wiring of these motors is shown in Fig. 6. Connections for a model M744S,T or model M745S,T motor with a 4-20 mA controller, are shown in Fig. 5. The circuit for connection of 3 M744S,T or M745S,T motors in series to a single 4-20 mA source is shown in Fig. 6.

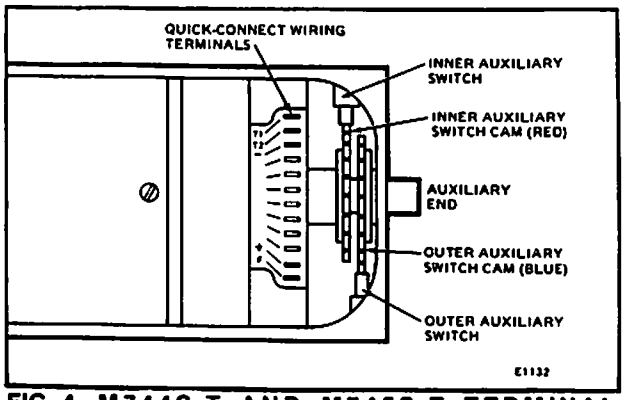

FIG. 4—M744S,T AND M745S,T TERMINAL LOCATIONS.

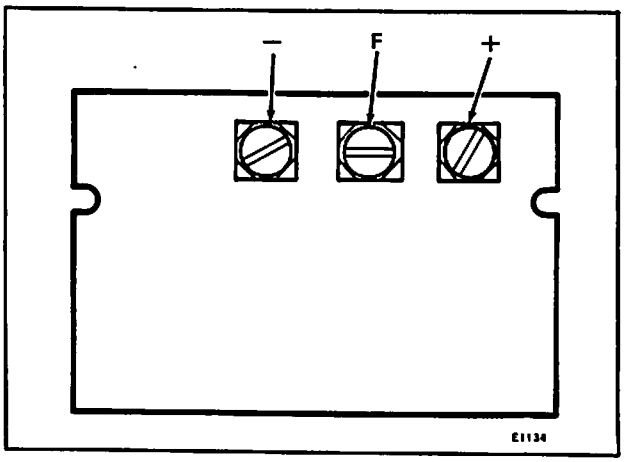

FIG. 5—SCREW TERMINAL ADAPTER.

CAUTION

Modutrol motors with electronic circuits are designed to ignore the presence of electrical pickup (unwanted input signals) and will work with standard wiring used with other Modutrol motors. However, there may be rare cases in which very large pickup is present, such that motor performance becomes erratic. This may happen when the controller wires are run near conductors carrying large electrical currents (to large electrical motors). Reroute controller wires away from these conductors or use twisted cable (Belden type 8443-3, or equivalent) to ensure proper control. If shielded cable is used, the shield must not be grounded.

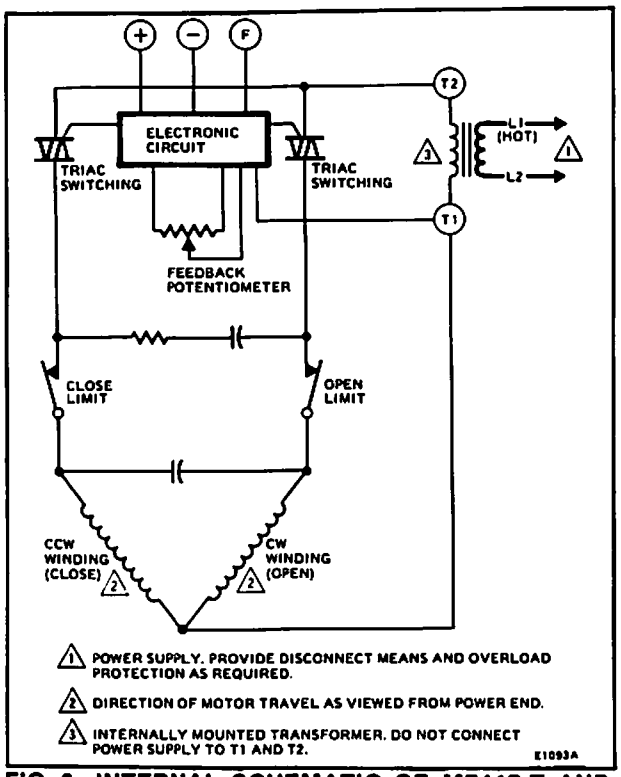

FIG. 6—INTERNAL SCHEMATIC OF M744S,T AND M745S,T MOTORS.

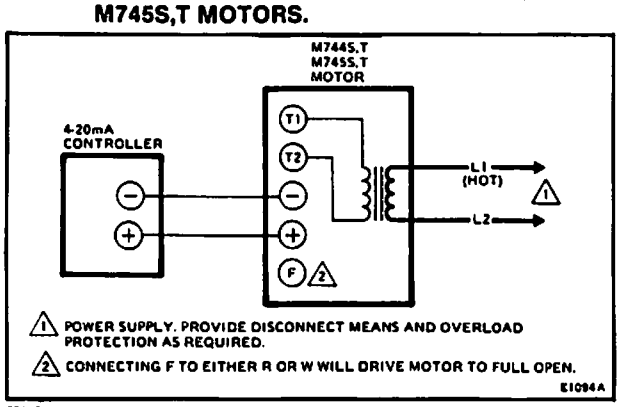

FIG. 7—M744S,T OR M745S,T CONNECTED TO A 4-20 mA CURRENT SOURCE.

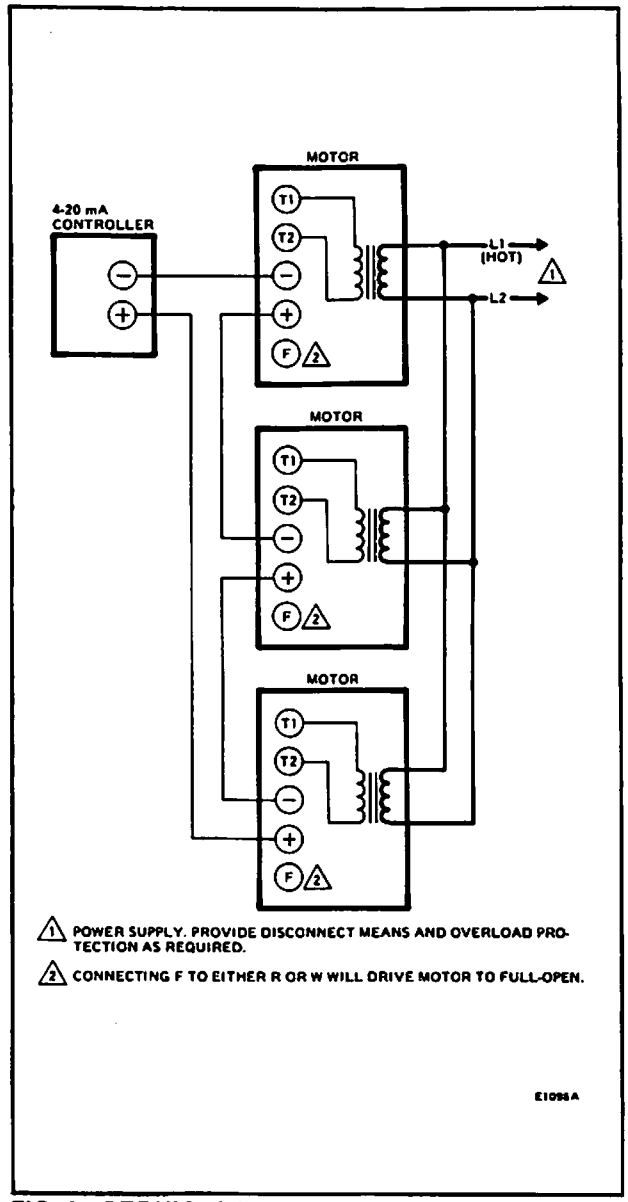

FIG. 8—SERIES CONNECTION OF M744S,T OR M745S,T MOTORS.

SETTINGS AND ADJUSTMENTS

The M744T and M745T Modutrol motors contain two auxiliary switches. These are Micro Switches, actuated by adjustable cams mounted on the motor shaft at the auxiliary end of the motor. These cams can be adjusted to permit auxiliary switching at any shaft position within the stroke of the motor. Switch differential is selectable with a choice of 1° or 10°.

AUXILIARY SWITCH SETTING PROCEDURE

1. Remove the 4 motor cover screws and remove cover to gain access to motor terminals and cam adjustment.
2. Disconnect controller from motor. Connect a current source to the (+) positive and (−) negative motor terminals. Refer to Fig. 9.
3. Adjust the current source so that motor shaft is in position where auxiliary equipment is to be switched.
4. Insert a 1/8 inch straight-blade screwdriver into slot on cam associated with selected auxiliary switch. (See Fig. 9 for switches and associated cams). MOVE TOP OF SCREWDRIVER as far as possible and repeat in successive slots, moving cam until switch contacts make. Direction of cam adjustment depends on differential desired.
5. Check for proper switching of auxiliary equipment as motor is run through its full stroke.
6. Disconnect the current source, reconnect controller, replace top cover on motor.

IMPORTANT

Do not turn motor shaft by hand or with a wrench, as damage to the gear train will result.

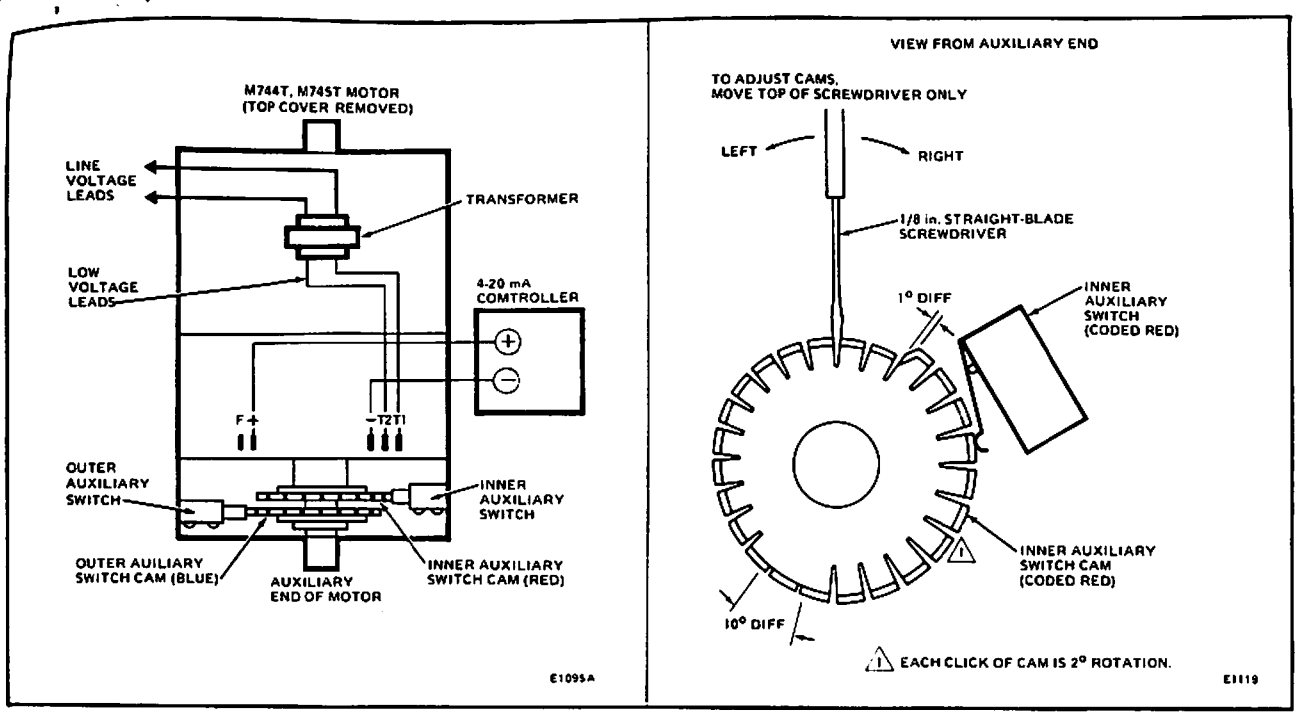

FIG. 9—AUXILIARY SWITCH ADJUSTMENT SETUP.

OPERATION AND CHECKOUT

The motor feedback potentiometer and control current input circuit form a bridge circuit. As long as the valve of the controlled medium remains at the controller set point, the circuit is balanced, and the motor does not run. When the value of the controlled medium changes, the current from the controller changes and unbalances the bridge circuit. This unbalance is amplified to energize the Triac switching to run the motor in the direction necessary to correct the change in temperature or pressure. The motor turns the feedback potentiometer to rebalance the circuit and stop the motor.

CHECKOUT

When the motor has been installed and the switches have been adjusted, check the motor operation to ensure that the motor operates the damper or valve properly and that the motor responds accurately to the controller signal.

Inspect the motor, linkage, and valve or damper to see that all mechanical connections are correct and secure. In damper installations, the pushrods should not extend more than a few inches past the ball joints. Check to see that there is adequate clearance for the linkage to move through its stroke without binding or striking other objects.

Check to see that cams operate the auxiliary switches, if used, at the desired point of motor rotation.

MOTOR OPERATION CHECK

1. To close motor, open terminals +, –, and F.
2. To open motor, jumper terminals F to + or F to –.

~~SYSTEM CHECKOUT—~~HEATING SYSTEM

1. Adjust the set point of the controller above the ambient temperature. The motor should drive toward the open position.
2. Adjust the set point of the controller below the ambient temperature. The motor should drive toward the closed position.

After checkout, adjust the controller to the desired set point for system operation.

NOTE: THIS MOTOR DOES NOT HAVE A TRIM POT FOR THE MAIN POT. THE MAIN POT READS 160Ω.

If questions arise regarding this product, contact your distributor or local Honeywell representative.

WHITE – TB4 BLUE – M2 – TB2
YELLOW – TB1 BLUE – M3 – TB6
RED – TB7
F TO + 3.6 VDC + TO – STray
F TO – 3.6 VDC

HONEYWELL MINNEAPOLIS, MN 55408 INTERNATIONAL Sales Offices in all principal cities of the world. Manufacturing in Australia, Canada, Finland, France, Germany, Japan, Mexico, Netherlands, Spain, Taiwan, United Kingdom, U.S.A.
PRINTED IN U.S.A.